Quotation

SQDWE001882-1

Job Name: Montana-Hoerenz

Quote Date: 08/14/2025

Manufacturer's Estimated Lead Time: 8-9 Weeks

Account Manager: Vic Milano

Dealer

Jilco Window
135 Mahopac Ave
Granite Springs, NY 10527

Customer

quick quote

Pricing Mode: Dealer Sales Price

Line	Label	Qty	UOM	Description	Unit	Extended
1	003	1	EA	35 13/16 inch X 84 inch, 1 3/4, TMF1011, Swing, Single, TruStile Interior MDF Door, 1/4" Kerf Cut Sticking, with Knockdown Jamb, Bevel Lock Side, LH, 20 Minute Neutral Pressure Fire Rating, Prime, Wedge, VERIFY HARDWARE COMPATIBILITY WITH KERF PLACEMENT	$1,602.72	$1,602.72

Please be aware that the hinge finish US10B (Oil Rubbed Bronze) varies widely across different hardware suppliers. Please verify the TruStile US10B hinge finish will be acceptable via the magnifying glass near your finish selection.

Fire Label = Machined and Labeled

*****Door Machining Details*****
Machine Prep = TruStile Standard Configuration
Machine Prep = Hinges, Lock Bore

Hinges = TruStile Installed
Hinges = Standard Spring Hinges
Hinges = NOTE: Only 2 hinges will be Spring type
Hinges = Brand: TruStile
Hinges = Qty: 3 - Size: 4" x 4" - Corners: Square
Hinges = Locations: Hinge 1: 7", Hinge 2: 38-1/2", Hinge 3: 70"
Hinges = Thickness: 0.130" - Backset: 1/4"
Hinges = Material: Plated Steel
Hinges = Finish: US10B-Oil Rubbed Bronze
Hinges = Qty:2 - Spring Hinge (11304), Qty:1 - Hinge (11312), Qty:3 - Structural Screw (13118), Qty:24 - Screws (14169)

Lock Bore = Prep For Hardware
Lock Bore = Standard Single Bore
Lock Bore = Location (ToD): 48" - Location (BoD): 36"
Lock Bore = 2-1/8" Diameter - 2-3/8" On Center Backset - 1" x 2-1/4" Radius Edge Prep - 3-1/2" Edge Bore Depth

*****Knock Down Jamb Details*****
Jamb Fire Rating = 20 Minute
Jamb Opening Type = House to Garage
Jamb Profile = Single Rabbet
Jamb Material = Finger Joint Pine (Primed)
Jamb Edge = 1/16" Radius Front Corner with Square Edge
Jamb Thickness = 3/4
Jamb Width = 6 9/16"
Kerf for Weatherstripping = Yes
Weatherstripping = Bronze
Weatherstrip Parts = Qty: 3 - QLON, Weather Strip, Bronze, 97" (10286)
Jamb Leg Length Extension = 1 5/8"
Sill = Composite Adjustable - Bronze Finish
Sill Extension = 2"
Sweep = Included
Sill Parts = Qty: 1 - Sill (14507), Qty: 1 - Sill Extension (14557), Qty: 1 -

Sweep (10365)

*****Jamb Machining Details*****
Jamb Leg Prep = Hinge Prep: Standard Hinge
Jamb Leg Prep = Lock Bore Strike: 2-1/4" Radius Lip Strike

Line	Label	Qty	UOM	Description	Unit	Extended
2	004	1	EA	35 13/16 inch X 84 inch, 1 3/4, TMF1011, Swing, Single, TruStile Interior MDF Door, 1/4" Kerf Cut Sticking, Prehung, Bevel Lock Side, RH, Prime, Wedge, VERIFY HARDWARE COMPATIBILITY WITH KERF PLACEMENT	$1,074.96	$1,074.96

Please be aware that the hinge finish US10B (Oil Rubbed Bronze) varies widely across different hardware suppliers. Please verify the TruStile US10B hinge finish will be acceptable via the magnifying glass near your finish selection.

*****Door Machining Details*****
Machine Prep = TruStile Standard Configuration
Machine Prep = Hinges, Lock Bore

Hinges = TruStile Installed
Hinges = Standard Ball Bearing Hinges
Hinges = Brand: TruStile
Hinges = Qty: 3 - Size: 4" x 4" - Corners: Square
Hinges = Locations: Hinge 1: 7", Hinge 2: 38-1/2", Hinge 3: 70"
Hinges = Thickness: 0.130" - Backset: 1/4"
Hinges = Material: Plated Steel
Hinges = Finish: US10B-Oil Rubbed Bronze
Hinges = Qty:3 - Hinge (11312), Qty:3 - Structural Screw (13118), Qty:24 - Screws (14169)

Lock Bore = Prep For Hardware
Lock Bore = Standard Single Bore
Lock Bore = Location (ToD): 48" - Location (BoD): 36"
Lock Bore = 2-1/8" Diameter - 2-3/8" On Center Backset - 1" x 2-1/4" Radius Edge Prep - 3-1/2" Edge Bore Depth

*****Pre-Hanging Details*****
Jamb Fire Rating = Non-Rated
Jamb Opening Type = Interior
Jamb Profile = Flat
Jamb Material = Finger Joint Poplar (Paint-Grade) (Primed)
Jamb Edge = 1/8" Radius Front Corner with Beveled Edge
Jamb Thickness = 3/4
Jamb Width = 4 9/16"
Jamb Stop Profile = Bull Nose
Jamb Stop Application = Applied
Jamb Stop Material = Finger Joint Poplar (Paint-Grade) (Primed)
Jamb Stop Width = 1 1/2"
Jamb Stop Thickness = 3/8"
Jamb Stop = Qty: 3 - Bull Nose (12521)
Jamb Leg Length Extension = 7/8"

*****Jamb Machining Details*****
Jamb Leg Prep = Hinge Prep: Standard Hinge
Jamb Leg Prep = Lock Bore Strike: 2-1/4" Radius Lip Strike

Line	Label	Qty	UOM	Description	Unit	Extended
3	005	1	EA	35 13/16 inch X 84 inch, 1 3/4, TMF1011, Swing, Single, TruStile Interior MDF Door, 1/4" Kerf Cut Sticking, with Knockdown Jamb, Bevel Lock Side, LH, 20 Minute Neutral Pressure Fire Rating, Prime, Wedge, VERIFY HARDWARE COMPATIBILITY WITH KERF PLACEMENT	$1,602.72	$1,602.72

Please be aware that the hinge finish US10B (Oil Rubbed Bronze) varies widely across different hardware suppliers. Please verify the TruStile US10B hinge finish will be acceptable via the magnifying glass near your finish selection.

Fire Label = Machined and Labeled

*****Door Machining Details*****
Machine Prep = TruStile Standard Configuration
Machine Prep = Hinges, Lock Bore

Hinges = TruStile Installed
Hinges = Standard Spring Hinges
Hinges = NOTE: Only 2 hinges will be Spring type
Hinges = Brand: TruStile
Hinges = Qty: 3 - Size: 4" x 4" - Corners: Square
Hinges = Locations: Hinge 1: 7", Hinge 2: 38-1/2", Hinge 3: 70"
Hinges = Thickness: 0.130" - Backset: 1/4"
Hinges = Material: Plated Steel

Hinges = Finish: US10B-Oil Rubbed Bronze
Hinges = Qty:2 - Spring Hinge (11304), Qty:1 - Hinge (11312), Qty:3 - Structural Screw (13118), Qty:24 - Screws (14169)

Lock Bore = Prep For Hardware
Lock Bore = Standard Single Bore
Lock Bore = Location (ToD): 48" - Location (BoD): 36"
Lock Bore = 2-1/8" Diameter - 2-3/8" On Center Backset - 1" x 2-1/4" Radius Edge Prep - 3-1/2" Edge Bore Depth

*****Knock Down Jamb Details*****
Jamb Fire Rating = 20 Minute
Jamb Opening Type = House to Garage
Jamb Profile = Single Rabbet
Jamb Material = Finger Joint Pine (Primed)
Jamb Edge = 1/16" Radius Front Corner with Square Edge
Jamb Thickness = 3/4
Jamb Width = 6 9/16"
Kerf for Weatherstripping = Yes
Weatherstripping = Bronze
Weatherstrip Parts = Qty: 3 - QLON, Weather Strip, Bronze, 97" (10286)
Jamb Leg Length Extension = 1 5/8"
Sill = Composite Adjustable - Bronze Finish
Sill Extension = 2"
Sweep = Included
Sill Parts = Qty: 1 - Sill (14507), Qty: 1 - Sill Extension (14557), Qty: 1 - Sweep (10365)

*****Jamb Machining Details*****
Jamb Leg Prep = Hinge Prep: Standard Hinge
Jamb Leg Prep = Lock Bore Strike: 2-1/4" Radius Lip Strike

Line	Label	Qty	UOM	Description	Unit	Extended
4	100	1	EA	30 inch X 96 inch, 1 3/4, TMF1011, Pocket, Single, TruStile Interior MDF Door, 1/4" Kerf Cut Sticking, Prime, Wedge	$877.68	$877.68

Pocket Frame System = No

Line	Label	Qty	UOM	Description	Unit	Extended
5	101	1	EA	29 13/16 inch X 96 inch, 1 3/4, TMF1011, Swing, Single, TruStile Interior MDF Door, 1/4" Kerf Cut Sticking, Prehung, Bevel Lock Side, RH, Prime, Wedge, VERIFY HARDWARE COMPATIBILITY WITH KERF PLACEMENT	$1,085.04	$1,085.04

Please be aware that the hinge finish US10B (Oil Rubbed Bronze) varies widely across different hardware suppliers. Please verify the TruStile US10B hinge finish will be acceptable via the magnifying glass near your finish selection.

*****Door Machining Details*****
Machine Prep = TruStile Standard Configuration
Machine Prep = Hinges, Lock Bore

Hinges = TruStile Installed
Hinges = Standard Ball Bearing Hinges
Hinges = Brand: TruStile
Hinges = Qty: 4 - Size: 4" x 4" - Corners: Square
Hinges = Locations: Hinge 1: 7", Hinge 2: 32", Hinge 3: 57", Hinge 4: 82"
Hinges = Thickness: 0.130" - Backset: 1/4"
Hinges = Material: Plated Steel
Hinges = Finish: US10B-Oil Rubbed Bronze
Hinges = Qty:4 - Hinge (11312), Qty:4 - Structural Screw (13118), Qty:32 - Screws (14169)

Lock Bore = Prep For Hardware
Lock Bore = Standard Single Bore
Lock Bore = Location (ToD): 60" - Location (BoD): 36"
Lock Bore = 2-1/8" Diameter - 2-3/8" On Center Backset - 1" x 2-1/4" Radius Edge Prep - 3-1/2" Edge Bore Depth

*****Pre-Hanging Details*****
Jamb Fire Rating = Non-Rated
Jamb Opening Type = Interior
Jamb Profile = Flat
Jamb Material = Finger Joint Poplar (Paint-Grade) (Primed)
Jamb Edge = 1/8" Radius Front Corner with Beveled Edge
Jamb Thickness = 3/4
Jamb Width = 4 9/16"
Jamb Stop Profile = Bull Nose
Jamb Stop Application = Applied
Jamb Stop Material = Finger Joint Poplar (Paint-Grade) (Primed)

Jamb Stop Width = 1 1/2"
Jamb Stop Thickness = 3/8"
Jamb Stop = Qty: 3 - Bull Nose (12521)
Jamb Leg Length Extension = 7/8"

*****Jamb Machining Details*****
Jamb Leg Prep = Hinge Prep: Standard Hinge
Jamb Leg Prep = Lock Bore Strike: 2-1/4" Radius Lip Strike

Line	Label	Qty	UOM	Description	Unit	Extended
6	102	1	EA	59 1/8 inch X 93 1/8 inch, 1 3/4, TMF1011, Bifold, 4 Leaf with Hardware, TruStile Interior MDF Door, 1/4" Kerf Cut Sticking, Prime, Wedge	$3,523.68	$3,523.68

Net Finished Opening Width = 60 in
Net Finished Opening Height = 96 in

*****Door Machining Details*****
Machine Prep = TruStile Standard Configuration
Machine Prep = Bifold

Bifold = TruStile Supplied
Bifold = Standard Bifold
Bifold = Brand: Johnson, Model: 100FD, Template: IN100FLD, Template Revision: 8/19
Bifold = Qty: 1 - BiFold Hardware 100FD 4-doors, 60" (16301)

Line	Label	Qty	UOM	Description	Unit	Extended
7	103	1	EA	35 13/16 inch X 96 inch, 1 3/4, TMF1011, Swing, Single, TruStile Interior MDF Door, 1/4" Kerf Cut Sticking, Prehung, Bevel Lock Side, LH, Prime, Wedge, VERIFY HARDWARE COMPATIBILITY WITH KERF PLACEMENT	$1,108.08	$1,108.08

Please be aware that the hinge finish US10B (Oil Rubbed Bronze) varies widely across different hardware suppliers. Please verify the TruStile US10B hinge finish will be acceptable via the magnifying glass near your finish selection.

*****Door Machining Details*****
Machine Prep = TruStile Standard Configuration
Machine Prep = Hinges, Lock Bore

Hinges = TruStile Installed
Hinges = Standard Ball Bearing Hinges
Hinges = Brand: TruStile
Hinges = Qty: 4 - Size: 4" x 4" - Corners: Square
Hinges = Locations: Hinge 1: 7", Hinge 2: 32", Hinge 3: 57", Hinge 4: 82"
Hinges = Thickness: 0.130" - Backset: 1/4"
Hinges = Material: Plated Steel
Hinges = Finish: US10B-Oil Rubbed Bronze
Hinges = Qty:4 - Hinge (11312), Qty:4 - Structural Screw (13118), Qty:32 - Screws (14169)

Lock Bore = Prep For Hardware
Lock Bore = Standard Single Bore
Lock Bore = Location (ToD): 60" - Location (BoD): 36"
Lock Bore = 2-1/8" Diameter - 2-3/8" On Center Backset - 1" x 2-1/4" Radius Edge Prep - 3-1/2" Edge Bore Depth

*****Pre-Hanging Details*****
Jamb Fire Rating = Non-Rated
Jamb Opening Type = Interior
Jamb Profile = Flat
Jamb Material = Finger Joint Poplar (Paint-Grade) (Primed)
Jamb Edge = 1/8" Radius Front Corner with Beveled Edge
Jamb Thickness = 3/4
Jamb Width = 4 9/16"
Jamb Stop Profile = Bull Nose
Jamb Stop Application = Applied
Jamb Stop Material = Finger Joint Poplar (Paint-Grade) (Primed)
Jamb Stop Width = 1 1/2"
Jamb Stop Thickness = 3/8"
Jamb Stop = Qty: 3 - Bull Nose (12521)
Jamb Leg Length Extension = 7/8"

*****Jamb Machining Details*****
Jamb Leg Prep = Hinge Prep: Standard Hinge
Jamb Leg Prep = Lock Bore Strike: 2-1/4" Radius Lip Strike

Line	Label	Qty	UOM	Description	Unit	Extended
8	105/106	2	EA	30 inch X 96 inch, 1 3/4, TMF1011, Pocket, Single, TruStile Interior MDF Door, 1/4" Kerf Cut Sticking, Prime, Wedge	$877.68	$1,755.36

Pocket Frame System = No

Line	Label	Qty	UOM	Description	Unit	Extended
9	107/108/109/110	4	EA	29 13/16 inch X 96 inch, 1 3/4, TMF1011, Swing, Single, TruStile Interior MDF Door, 1/4" Kerf Cut Sticking, Prehung, Bevel Lock Side, LH, Prime, Wedge, VERIFY HARDWARE COMPATIBILITY WITH KERF PLACEMENT	$1,085.04	$4,340.16

Please be aware that the hinge finish US10B (Oil Rubbed Bronze) varies widely across different hardware suppliers. Please verify the TruStile US10B hinge finish will be acceptable via the magnifying glass near your finish selection.

*****Door Machining Details*****
Machine Prep = TruStile Standard Configuration
Machine Prep = Hinges, Lock Bore

Hinges = TruStile Installed
Hinges = Standard Ball Bearing Hinges
Hinges = Brand: TruStile
Hinges = Qty: 4 - Size: 4" x 4" - Corners: Square
Hinges = Locations: Hinge 1: 7", Hinge 2: 32", Hinge 3: 57", Hinge 4: 82"
Hinges = Thickness: 0.130" - Backset: 1/4"
Hinges = Material: Plated Steel
Hinges = Finish: US10B-Oil Rubbed Bronze
Hinges = Qty:4 - Hinge (11312), Qty:4 - Structural Screw (13118), Qty:32 - Screws (14169)

Lock Bore = Prep For Hardware
Lock Bore = Standard Single Bore
Lock Bore = Location (ToD): 60" - Location (BoD): 36"
Lock Bore = 2-1/8" Diameter - 2-3/8" On Center Backset - 1" x 2-1/4" Radius Edge Prep - 3-1/2" Edge Bore Depth

*****Pre-Hanging Details*****
Jamb Fire Rating = Non-Rated
Jamb Opening Type = Interior
Jamb Profile = Flat
Jamb Material = Finger Joint Poplar (Paint-Grade) (Primed)
Jamb Edge = 1/8" Radius Front Corner with Beveled Edge
Jamb Thickness = 3/4
Jamb Width = 4 9/16"
Jamb Stop Profile = Bull Nose
Jamb Stop Application = Applied
Jamb Stop Material = Finger Joint Poplar (Paint-Grade) (Primed)
Jamb Stop Width = 1 1/2"
Jamb Stop Thickness = 3/8"
Jamb Stop = Qty: 3 - Bull Nose (12521)
Jamb Leg Length Extension = 7/8"

*****Jamb Machining Details*****
Jamb Leg Prep = Hinge Prep: Standard Hinge
Jamb Leg Prep = Lock Bore Strike: 2-1/4" Radius Lip Strike

Line	Label	Qty	UOM	Description	Unit	Extended
10	111	1	EA	24 inch X 96 inch, 1 3/4, TMF1011, Pocket, Single, TruStile Interior MDF Door, 1/4" Kerf Cut Sticking, Prime, Wedge	$849.60	$849.60

Pocket Frame System = No

Line	Label	Qty	UOM	Description	Unit	Extended
11	112	1	EA	31 13/16 inch X 96 inch, 1 3/4, TMF1011, Swing, Single, TruStile Interior MDF Door, 1/4" Kerf Cut Sticking, Prehung, Bevel Lock Side, RH, Prime, Wedge, VERIFY HARDWARE COMPATIBILITY WITH KERF PLACEMENT	$1,091.52	$1,091.52

Please be aware that the hinge finish US10B (Oil Rubbed Bronze) varies widely across different hardware suppliers. Please verify the TruStile US10B hinge finish will be acceptable via the magnifying glass near your finish selection.

*****Door Machining Details*****
Machine Prep = TruStile Standard Configuration
Machine Prep = Hinges, Lock Bore

Hinges = TruStile Installed
Hinges = Standard Ball Bearing Hinges
Hinges = Brand: TruStile
Hinges = Qty: 4 - Size: 4" x 4" - Corners: Square
Hinges = Locations: Hinge 1: 7", Hinge 2: 32", Hinge 3: 57", Hinge 4:

82"
Hinges = Thickness: 0.130" - Backset: 1/4"
Hinges = Material: Plated Steel
Hinges = Finish: US10B-Oil Rubbed Bronze
Hinges = Qty:4 - Hinge (11312), Qty:4 - Structural Screw (13118), Qty:32 - Screws (14169)

Lock Bore = Prep For Hardware
Lock Bore = Standard Single Bore
Lock Bore = Location (ToD): 60" - Location (BoD): 36"
Lock Bore = 2-1/8" Diameter - 2-3/8" On Center Backset - 1" x 2-1/4" Radius Edge Prep - 3-1/2" Edge Bore Depth

*****Pre-Hanging Details*****
Jamb Fire Rating = Non-Rated
Jamb Opening Type = Interior
Jamb Profile = Flat
Jamb Material = Finger Joint Poplar (Paint-Grade) (Primed)
Jamb Edge = 1/8" Radius Front Corner with Beveled Edge
Jamb Thickness = 3/4
Jamb Width = 4 9/16"
Jamb Stop Profile = Bull Nose
Jamb Stop Application = Applied
Jamb Stop Material = Finger Joint Poplar (Paint-Grade) (Primed)
Jamb Stop Width = 1 1/2"
Jamb Stop Thickness = 3/8"
Jamb Stop = Qty: 3 - Bull Nose (12521)
Jamb Leg Length Extension = 7/8"

*****Jamb Machining Details*****
Jamb Leg Prep = Hinge Prep: Standard Hinge
Jamb Leg Prep = Lock Bore Strike: 2-1/4" Radius Lip Strike

Line	Label	Qty	UOM	Description	Unit	Extended
12	200	1	EA	29 13/16 inch X 80 inch, 1 3/4, TMF1011, Swing, Single, TruStile Interior MDF Door, 1/4" Kerf Cut Sticking, Prehung, Bevel Lock Side, LH, Prime, Wedge, VERIFY HARDWARE COMPATIBILITY WITH KERF PLACEMENT	$1,033.92	$1,033.92

Please be aware that the hinge finish US10B (Oil Rubbed Bronze) varies widely across different hardware suppliers. Please verify the TruStile US10B hinge finish will be acceptable via the magnifying glass near your finish selection.

*****Door Machining Details*****
Machine Prep = TruStile Standard Configuration
Machine Prep = Hinges, Lock Bore

Hinges = TruStile Installed
Hinges = Standard Ball Bearing Hinges
Hinges = Brand: TruStile
Hinges = Qty: 3 - Size: 4" x 4" - Corners: Square
Hinges = Locations: Hinge 1: 7", Hinge 2: 36-1/2", Hinge 3: 66"
Hinges = Thickness: 0.130" - Backset: 1/4"
Hinges = Material: Plated Steel
Hinges = Finish: US10B-Oil Rubbed Bronze
Hinges = Qty:3 - Hinge (11312), Qty:3 - Structural Screw (13118), Qty:24 - Screws (14169)

Lock Bore = Prep For Hardware
Lock Bore = Standard Single Bore
Lock Bore = Location (ToD): 44" - Location (BoD): 36"
Lock Bore = 2-1/8" Diameter - 2-3/8" On Center Backset - 1" x 2-1/4" Radius Edge Prep - 3-1/2" Edge Bore Depth

*****Pre-Hanging Details*****
Jamb Fire Rating = Non-Rated
Jamb Opening Type = Interior
Jamb Profile = Flat
Jamb Material = Finger Joint Poplar (Paint-Grade) (Primed)
Jamb Edge = 1/8" Radius Front Corner with Beveled Edge
Jamb Thickness = 3/4
Jamb Width = 4 9/16"
Jamb Stop Profile = Bull Nose
Jamb Stop Application = Applied
Jamb Stop Material = Finger Joint Poplar (Paint-Grade) (Primed)
Jamb Stop Width = 1 1/2"
Jamb Stop Thickness = 3/8"
Jamb Stop = Qty: 3 - Bull Nose (12521)
Jamb Leg Length Extension = 7/8"

*****Jamb Machining Details*****
Jamb Leg Prep = Hinge Prep: Standard Hinge

Jamb Leg Prep = Lock Bore Strike: 2-1/4" Radius Lip Strike

Line	Label	Qty	UOM	Description	Unit	Extended
13	201	1	EA	29 13/16 inch X 80 inch, 1 3/4, TMF1011, Swing, Single, TruStile Interior MDF Door, 1/4" Kerf Cut Sticking, Prehung, Bevel Lock Side, RH, Prime, Wedge, VERIFY HARDWARE COMPATIBILITY WITH KERF PLACEMENT Please be aware that the hinge finish US10B (Oil Rubbed Bronze) varies widely across different hardware suppliers. Please verify the TruStile US10B hinge finish will be acceptable via the magnifying glass near your finish selection. *****Door Machining Details***** Machine Prep = TruStile Standard Configuration Machine Prep = Hinges, Lock Bore Hinges = TruStile Installed Hinges = Standard Ball Bearing Hinges Hinges = Brand: TruStile Hinges = Qty: 3 - Size: 4" x 4" - Corners: Square Hinges = Locations: Hinge 1: 7", Hinge 2: 36-1/2", Hinge 3: 66" Hinges = Thickness: 0.130" - Backset: 1/4" Hinges = Material: Plated Steel Hinges = Finish: US10B-Oil Rubbed Bronze Hinges = Qty:3 - Hinge (11312), Qty:3 - Structural Screw (13118), Qty:24 - Screws (14169) Lock Bore = Prep For Hardware Lock Bore = Standard Single Bore Lock Bore = Location (ToD): 44" - Location (BoD): 36" Lock Bore = 2-1/8" Diameter - 2-3/8" On Center Backset - 1" x 2-1/4" Radius Edge Prep - 3-1/2" Edge Bore Depth *****Pre-Hanging Details***** Jamb Fire Rating = Non-Rated Jamb Opening Type = Interior Jamb Profile = Flat Jamb Material = Finger Joint Poplar (Paint-Grade) (Primed) Jamb Edge = 1/8" Radius Front Corner with Beveled Edge Jamb Thickness = 3/4 Jamb Width = 4 9/16" Jamb Stop Profile = Bull Nose Jamb Stop Application = Applied Jamb Stop Material = Finger Joint Poplar (Paint-Grade) (Primed) Jamb Stop Width = 1 1/2" Jamb Stop Thickness = 3/8" Jamb Stop = Qty: 3 - Bull Nose (12521) Jamb Leg Length Extension = 7/8" *****Jamb Machining Details***** Jamb Leg Prep = Hinge Prep: Standard Hinge Jamb Leg Prep = Lock Bore Strike: 2-1/4" Radius Lip Strike	$1,033.92	$1,033.92

Line	Label	Qty	UOM	Description	Unit	Extended
14	202	1	EA	29 13/16 inch X 60 inch, 1 3/4, TMF1011, Swing, Single, TruStile Interior MDF Door, 1/4" Kerf Cut Sticking, Prehung, Bevel Lock Side, LH, Prime, Wedge, VERIFY HARDWARE COMPATIBILITY WITH KERF PLACEMENT Please be aware that the hinge finish US10B (Oil Rubbed Bronze) varies widely across different hardware suppliers. Please verify the TruStile US10B hinge finish will be acceptable via the magnifying glass near your finish selection. *****Door Machining Details***** Machine Prep = TruStile Modified Configuration Machine Prep = Hinges, Lock Bore Hinges = TruStile Installed Hinges = Standard Ball Bearing Hinges Hinges = Brand: TruStile Hinges = Qty: 3 - Size: 4" x 4" - Corners: Square Hinges = Locations: Hinge 1: 7", Hinge 2: 27-1/4", Hinge 3: 47-1/2" Hinges = Thickness: 0.130" - Backset: 1/4" Hinges = Material: Plated Steel Hinges = Finish: US10B-Oil Rubbed Bronze Hinges = Qty:3 - Hinge (11312), Qty:3 - Structural Screw (13118), Qty:24 - Screws (14169) Lock Bore = Prep For Hardware Lock Bore = Modified Single Bore Lock Bore = Location (ToD): 24" - Location (BoD): 36"	$1,033.92	$1,033.92

Lock Bore = 2-1/8" Diameter - 2-3/8" On Center Backset - 1" x 2-1/4" Radius Edge Prep - 3-1/2" Edge Bore Depth

*****Pre-Hanging Details*****
Jamb Fire Rating = Non-Rated
Jamb Opening Type = Interior
Jamb Profile = Flat
Jamb Material = Finger Joint Poplar (Paint-Grade) (Primed)
Jamb Edge = 1/8" Radius Front Corner with Beveled Edge
Jamb Thickness = 3/4
Jamb Width = 4 9/16"
Jamb Stop Profile = Bull Nose
Jamb Stop Application = Applied
Jamb Stop Material = Finger Joint Poplar (Paint-Grade) (Primed)
Jamb Stop Width = 1 1/2"
Jamb Stop Thickness = 3/8"
Jamb Stop = Qty: 3 - Bull Nose (12521)
Jamb Leg Length Extension = 7/8"

*****Jamb Machining Details*****
Jamb Leg Prep = Hinge Prep: Standard Hinge
Jamb Leg Prep = Lock Bore Strike: 2-1/4" Radius Lip Strike

Line	Label	Qty	UOM	Description	Unit	Extended
15	002	1		TM1000 Door Style, ES101 Configuration	$3,846.92	$3,846.92

If this Entry System will be painted in a darker color, TruStile requires a factory installed multipoint lock for warranty coverage
Please be aware that the hinge finish US10B (Oil Rubbed Bronze) varies widely across different hardware suppliers. Remember to click on the magnifying glass next to hinge finish to confirm color matching prior to order.

DOOR
Unit Style = TM1000
Dimensions = 35 13/16" x 84"
Thickness = 1-3/4"
Leaf Count = Single
Handing = RH
Beveling = Bevel Lock Side
Material = Resilient Engineered Wood
Door Construction = TruStile Resilient Entry
Sticking = SS-Square Stick
Prefinish = Premium Prime
Panel Substitution = Replace All Panels with Glass
Outboard Glass = Clear, With LoE272 Coating
Inboard Glass = Clear
Glass Spacer Color = Black
Drip Trim = Metal (Pemko 3452)
Drip Trim Finish = Dark Bronze
Drip Trim Parts = Qty: 1 - Drip Cap, Dark Bronze Aluminum w/Black Insert- 42" - Pemko 3452DPK (15036)
Door Sweep Parts = Qty: 1 - Sweep - Weatherstrip Carrier,49 (15172), Qty: 2 - Sweep Weatherstrip 49" (15180)

*****Door Machining Details*****
Machine Prep = TruStile Standard Configuration
Machine Prep = Hinges, Lock Bore, Deadbolt Bore

Hinges = TruStile Installed
Hinges = Standard Ball Bearing Hinges
Hinges = Brand: TruStile
Hinges = Qty: 3 - Size: 4-1/2" x 4-1/2" - Corners: Square
Hinges = Locations: Hinge 1: 6-3/4", Hinge 2: 38-1/4", Hinge 3: 69-3/4"
Hinges = Thickness: 0.134" - Backset: 1/4"
Hinges = Material: Plated Steel
Hinges = Finish: US10B-Oil Rubbed Bronze
Hinges = Qty:3 - Hinge (11328), Qty:3 - Structural Screw (13118), Qty:24 - Screws (14169)

Lock Bore = Prep For Hardware
Lock Bore = Standard Single Bore
Lock Bore = Location (ToD): 48" - Location (BoD): 36"
Lock Bore = 2-1/8" Diameter - 2-3/8" On Center Backset - 1" x 2-1/4" Radius Edge Prep - 3-1/2" Edge Bore Depth

Deadbolt Bore = Prep For Hardware
Deadbolt Bore = Standard Deadbolt Bore
Deadbolt Bore = Location (ToD): 42 1/2" - Location (BoD): 41 1/2"
Deadbolt Bore = 2-1/8" Diameter - 2-3/8" On Center Backset - 1" x 2-1/4" Radius Edge Prep - 3-1/2" Edge Bore Depth

Frame Details
Frame Assembly = Prehung
Head/Sill Construction = Individually Boxed
Frame Type = Single Rabbet
Wall Depth = 6 9/16"
Material = Solid Accoya
Prefinish = Premium Prime
Edge Profile = Square
Weatherstrip Color = Black
Weatherstrip Parts = Cut to length (14984)
Sill Type = Oak Adjustable
Sill Finish = Bronze Anodized Aluminum
Sill Depth = 7 5/8"
Sill Parts = Qty: 1 - 7-5/8" x 1-3/8", Inswing, full composite base, hardwood rail/nosing,bronze alum, 40.5" (15058), Qty: 1 - 7 5/8" x 34 1/2" Sill Cover (15279)

*****Frame Machining Details*****
Jamb Leg Prep = Hinge Prep: Standard Hinge
Jamb Leg Prep = Lock Bore Strike: Prep For Hardware - 2-1/4" Radius Lip Strike
Jamb Leg Prep = Deadbolt Bore Strike: Prep For Hardware - 2-3/4" x 1-1/8" Radius Corner

Line	Label	Qty	UOM	Description	Unit	Extended
16	104	1		PL104 Door Style, PL102 Sidelites, ES105 Configuration	$10,920.14	$10,920.14

If this Entry System will be painted in a darker color, TruStile requires a factory installed multipoint lock for warranty coverage
Please be aware that the hinge finish US10B (Oil Rubbed Bronze) varies widely across different hardware suppliers. Remember to click on the magnifying glass next to hinge finish to confirm color matching prior to order.

DOOR
Unit Style = PL104
Dimensions = 35 13/16" x 96"
Thickness = 1-3/4"
Leaf Count = Single
Handing = RH
Beveling = Bevel Lock Side
Material = Resilient Engineered Wood
Door Construction = TruStile Resilient Entry
Sticking = SS-Square Stick
Panel = C
Prefinish = Premium Prime
Muntin Type = Simulated Divided Light
Muntin Width = 7/8"
Muntin SDL Inner Bar Color = Black
Outboard Glass = Clear, With LoE272 Coating
Inboard Glass = Clear
Glass Spacer Color = Black
Drip Trim = Metal (Pemko 3452)
Drip Trim Finish = Dark Bronze
Drip Trim Parts = Qty: 1 - Drip Cap, Dark Bronze Aluminum w/Black Insert- 42" - Pemko 3452DPK (15036)
Door Sweep Parts = Qty: 1 - Sweep - Weatherstrip Carrier,49 (15172), Qty: 2 - Sweep Weatherstrip 49" (15180)

*****Door Machining Details*****
Machine Prep = TruStile Standard Configuration
Machine Prep = Hinges, Lock Bore, Deadbolt Bore

Hinges = TruStile Installed
Hinges = Standard Ball Bearing Hinges
Hinges = Brand: TruStile
Hinges = Qty: 4 - Size: 4-1/2" x 4-1/2" - Corners: Square
Hinges = Locations: Hinge 1: 6-3/4", Hinge 2: 31-3/4", Hinge 3: 56-3/4", Hinge 4: 81-3/4"
Hinges = Thickness: 0.134" - Backset: 1/4"
Hinges = Material: Plated Steel
Hinges = Finish: US10B-Oil Rubbed Bronze
Hinges = Qty:4 - Hinge (11328), Qty:4 - Structural Screw (13118), Qty:32 - Screws (14169)

Lock Bore = Prep For Hardware
Lock Bore = Standard Single Bore
Lock Bore = Location (ToD): 60" - Location (BoD): 36"
Lock Bore = 2-1/8" Diameter - 2-3/8" On Center Backset - 1" x 2-1/4" Radius Edge Prep - 3-1/2" Edge Bore Depth

Deadbolt Bore = Prep For Hardware

Deadbolt Bore = Standard Deadbolt Bore
Deadbolt Bore = Location (ToD): 54 1/2" - Location (BoD): 41 1/2"
Deadbolt Bore = 2-1/8" Diameter - 2-3/8" On Center Backset - 1" x 2-1/4" Radius Edge Prep - 3-1/2" Edge Bore Depth

LEFT SIDELITE
Unit Style = PL102
Dimensions = 13 13/16" x 96 9/32"
Thickness = 1-3/4"
Material = Resilient Engineered Wood
Door Construction = TruStile Resilient Entry
Sticking = SS-Square Stick
Panel = C
Prefinish = Premium Prime
Muntin Type = Simulated Divided Light
Muntin Width = 7/8"
Muntin SDL Inner Bar Color = Black
Outboard Glass = Clear, With LoE272 Coating
Inboard Glass = Clear
Glass Spacer Color = Black
Drip Trim = Resilient Engineered Wood
Drip Trim Material = Solid Accoya
Interior Sash Stop Profile = Square

RIGHT SIDELITE
Unit Style = PL102
Dimensions = 13 13/16" x 96 9/32"
Thickness = 1-3/4"
Material = Resilient Engineered Wood
Door Construction = TruStile Resilient Entry
Sticking = SS-Square Stick
Panel = C
Prefinish = Premium Prime
Muntin Type = Simulated Divided Light
Muntin Width = 7/8"
Muntin SDL Inner Bar Color = Black
Outboard Glass = Clear, With LoE272 Coating
Inboard Glass = Clear
Glass Spacer Color = Black
Drip Trim = Resilient Engineered Wood
Drip Trim Material = Solid Accoya
Interior Sash Stop Profile = Square

UNIT FRAME
System Layout = ES105
Frame Assembly = Assembled
Head/Sill Construction = Continuous
Frame Type = Single Rabbet
Wall Depth = 6 9/16"
Material = Solid Accoya
Prefinish = Premium Prime
Edge Profile = Square
Weatherstrip Color = Black
Weatherstrip Parts = Cut to length (14984)
Mull Post = Single Rabbet (Back to Back)
Mull Post Depth = Wall Depth (6 9/16)
Sill Type = Oak Adjustable
Sill Finish = Bronze Anodized Aluminum
Sill Depth = 7 5/8"
Sill Parts = Qty: 1 - 7-5/8" x 1-3/8", Inswing, full composite base, hardwood rail/nosing,bronze alum,72.5" (15059), Qty: 1 - 7 5/8" x 34 1/2" Sill Cover (15279)
Vertical Mull Type = None
Mull Cover Material = Solid Accoya
Mull Cover Prefinish = Premium Prime
Mull Cover Thickness = Inside: 1/4", Outside: 5/8"
Mull Cover Width (Vertical) = Inside: 1", Outside: 2"
Mull Cover Reveal = Inside: 1/4", Outside: 1/4"
Mull Cover Edges = Inside: Square, Outside: Square

*****Frame Machining Details*****
Jamb Leg Prep = Hinge Prep: Standard Hinge
Jamb Leg Prep = Lock Bore Strike: Prep For Hardware - 2-1/4" Radius Lip Strike
Jamb Leg Prep = Deadbolt Bore Strike: Prep For Hardware - 2-3/4" x 1-1/8" Radius Corner

Line	Label	Qty	UOM	Description	Unit	Extended
17		1	EA	Manufacturer's Freight for 21 Doors	$226.67	$226.67
					Tax (8.38%):	**$3,099.34**
Total Units:		**18**			**Total:**	**$40,106.35**

Door Elevation

TruStile Doors, LLC
1111 E. 71st Ave.
Denver, CO. 80229
www.trustile.com

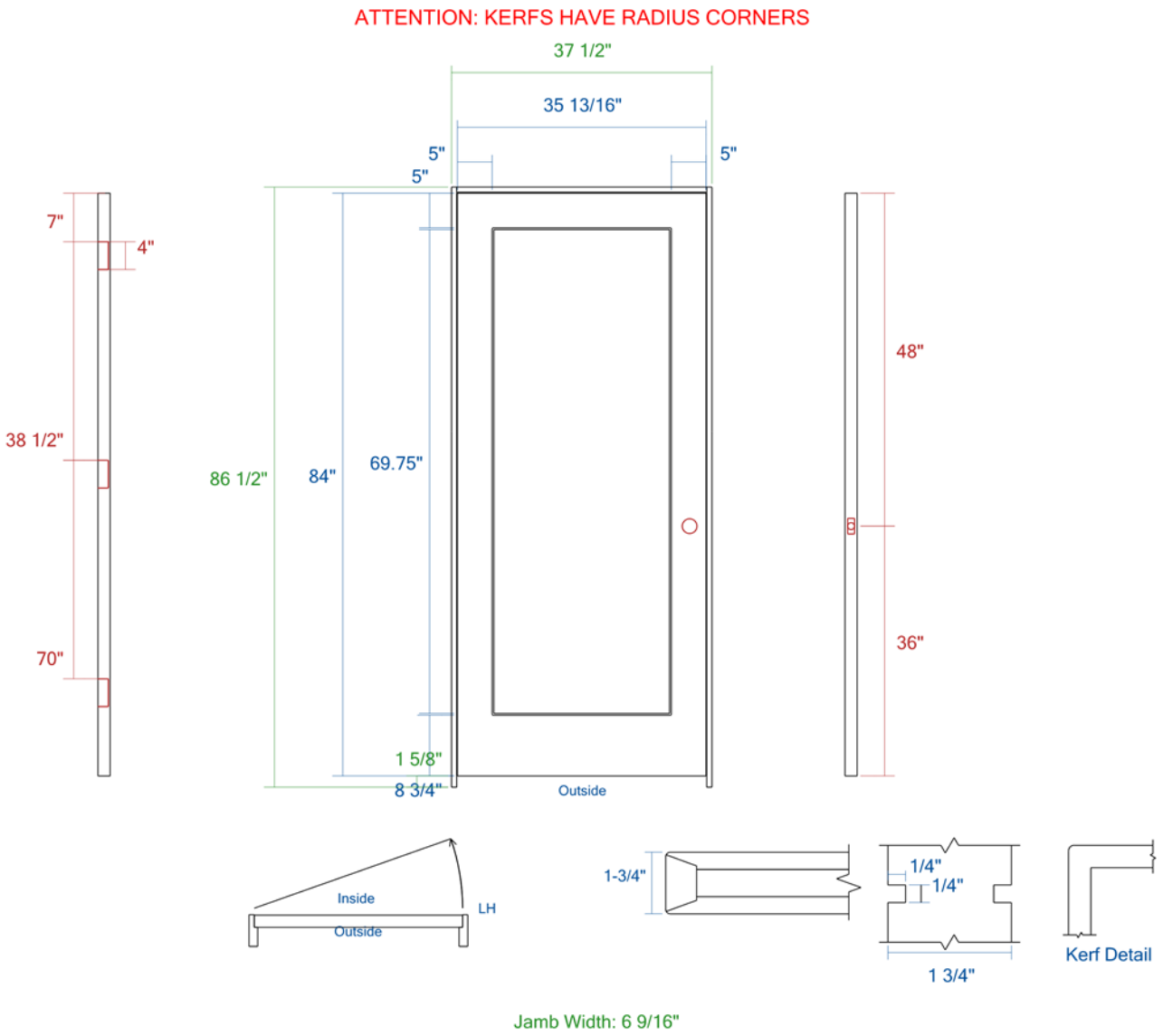

Door Style	Sticking	Panel	Material	Glass	Fire Rating	Grade
TMF1011	14Kerf	NA	MDF	N/A	20 Minute Neutral Pressure	Interior

Quote #: SQDWE001882-1	Line #: 1 - 003
Jilco Window	Entered By: Vic Milano
Approval (sign here):	Created On: 08/14/2025

Door Elevation

TruStile Doors, LLC
1111 E. 71st Ave.
Denver, CO. 80229
www.trustile.com

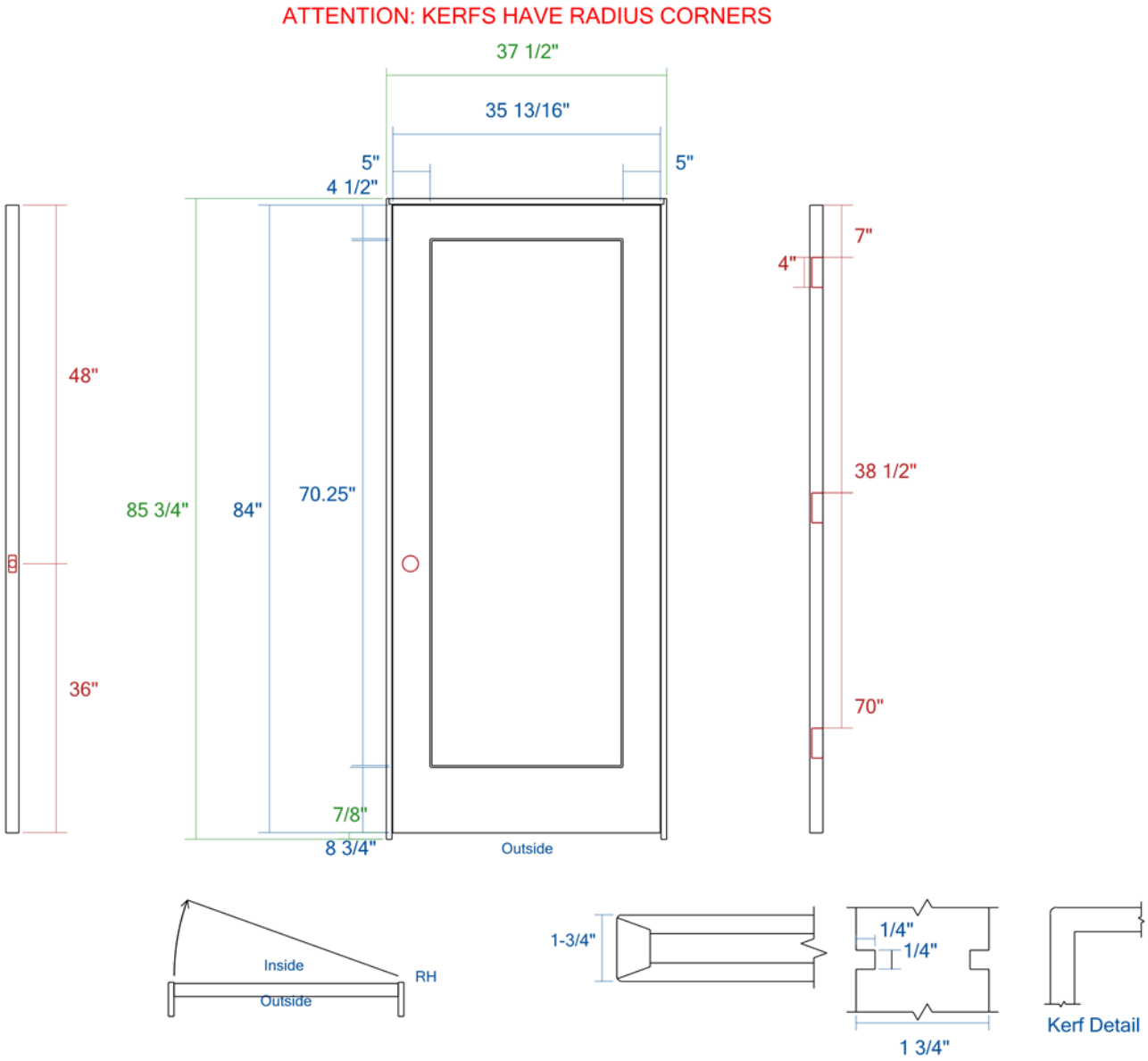

Jamb Width: 4 9/16"
Jamb Stop: Bull Nose (Applied)

Door Style	Sticking	Panel	Material	Glass	Fire Rating	Grade
TMF1011	14Kerf	NA	MDF	N/A	Non-Rated	Interior

Quote #: SQDWE001882-1	Line #: 2 - 004
Jilco Window	Entered By: Vic Milano
Approval (sign here):	Created On: 08/14/2025

Door Elevation

TruStile Doors, LLC
1111 E. 71st Ave.
Denver, CO. 80229
www.trustile.com

Door Style	Sticking	Panel	Material	Glass	Fire Rating	Grade
TMF1011	14Kerf	NA	MDF	N/A	20 Minute Neutral Pressure	Interior

Quote #: SQDWE001882-1	Line #: 3 - 005
Jilco Window	Entered By: Vic Milano
Approval (sign here):	Created On: 08/14/2025

Door Elevation

TruStile Doors, LLC
1111 E. 71st Ave.
Denver, CO. 80229
www.trustile.com

ATTENTION: KERFS HAVE RADIUS CORNERS

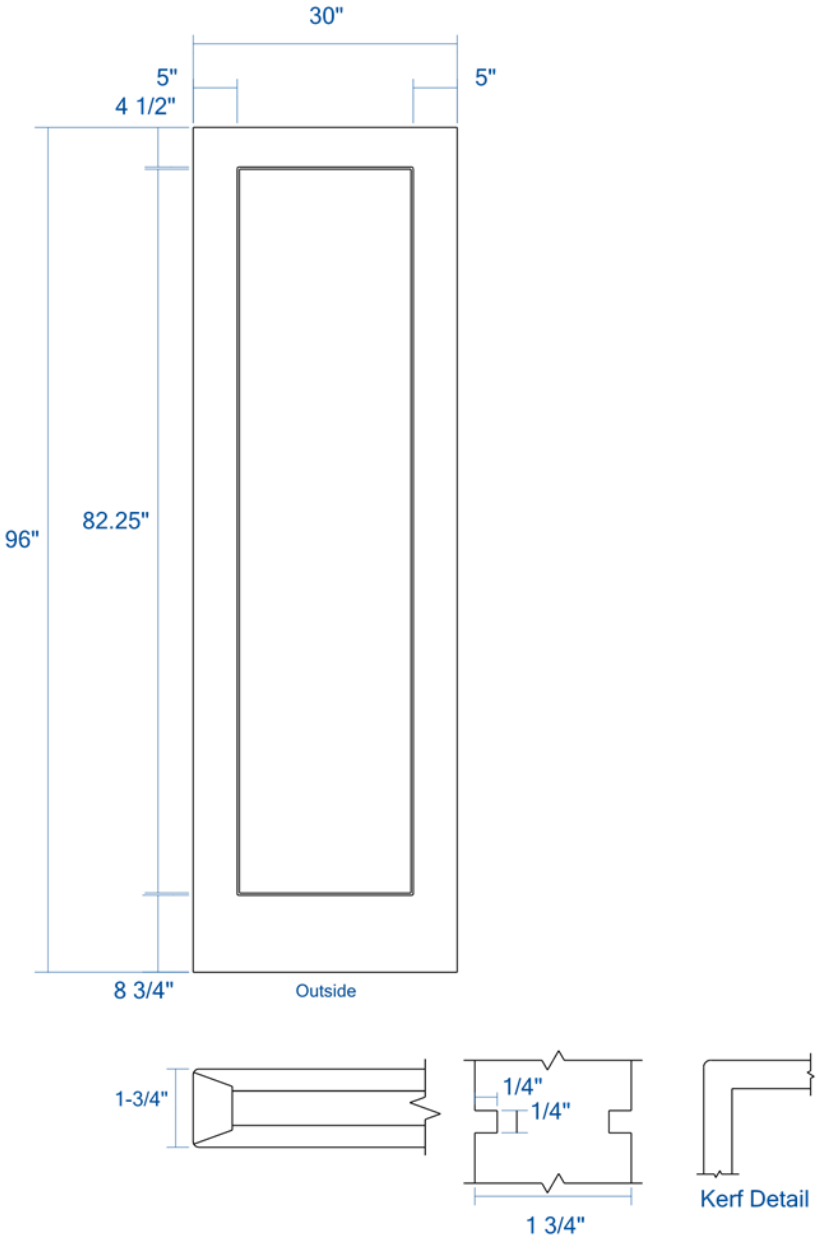

Door Style	Sticking	Panel	Material	Glass	Fire Rating	Grade
TMF1011	14Kerf	NA	MDF	N/A	Non-Rated	Interior

Quote #: SQDWE001882-1	Line #: 4 - 100
Jilco Window	Entered By: Vic Milano
Approval (sign here):	Created On: 08/14/2025

Door Elevation

TruStile Doors, LLC
1111 E. 71st Ave.
Denver, CO. 80229
www.trustile.com

ATTENTION: KERFS HAVE RADIUS CORNERS

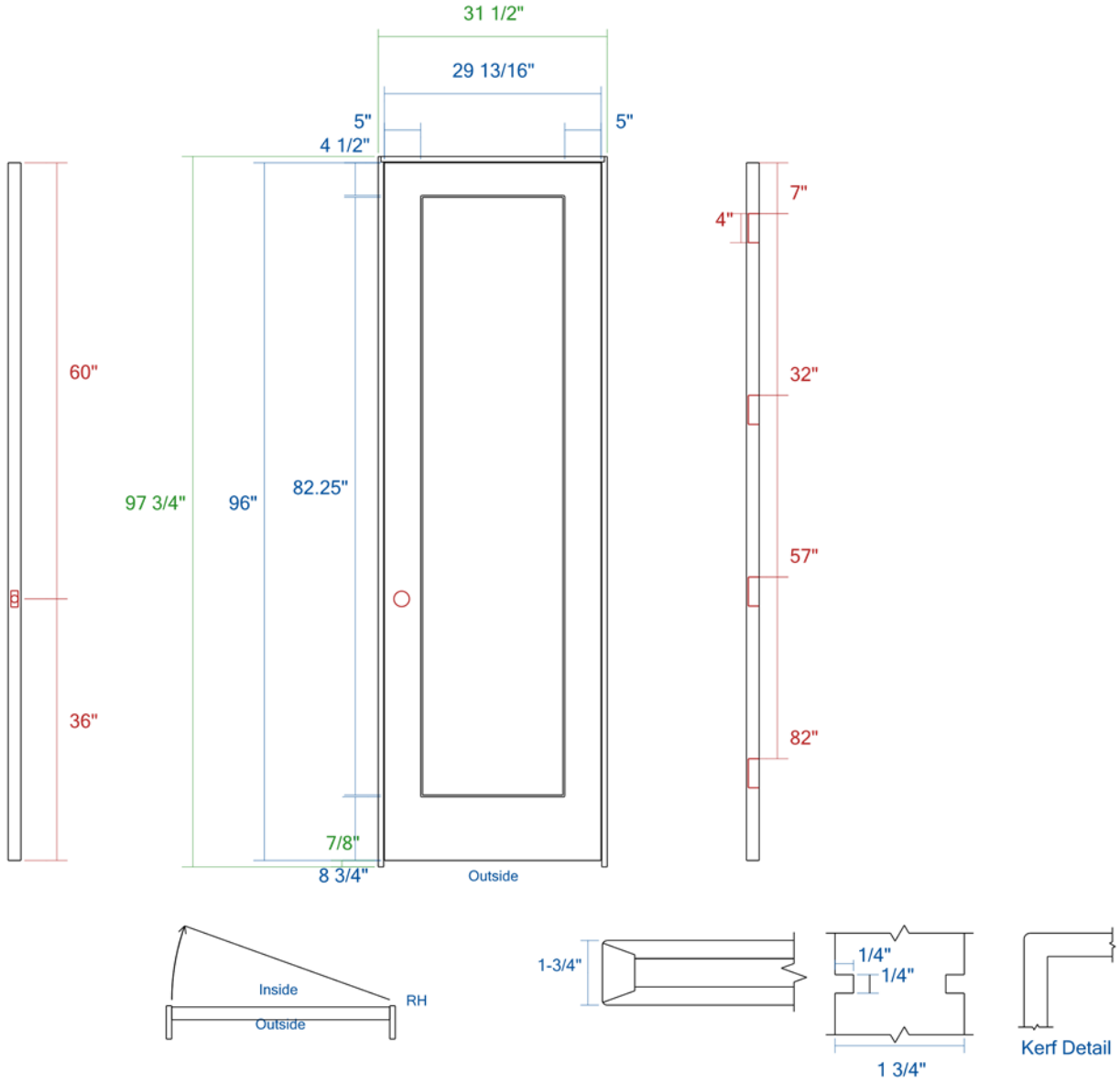

Jamb Width: 4 9/16"
Jamb Stop: Bull Nose (Applied)

Door Style	Sticking	Panel	Material	Glass	Fire Rating	Grade
TMF1011	14Kerf	NA	MDF	N/A	Non-Rated	Interior

Quote #: SQDWE001882-1	Line #: 5 - 101
Jilco Window	Entered By: Vic Milano
Approval (sign here):	Created On: 08/14/2025

Door Elevation

TruStile Doors, LLC
1111 E. 71st Ave.
Denver, CO. 80229
www.trustile.com

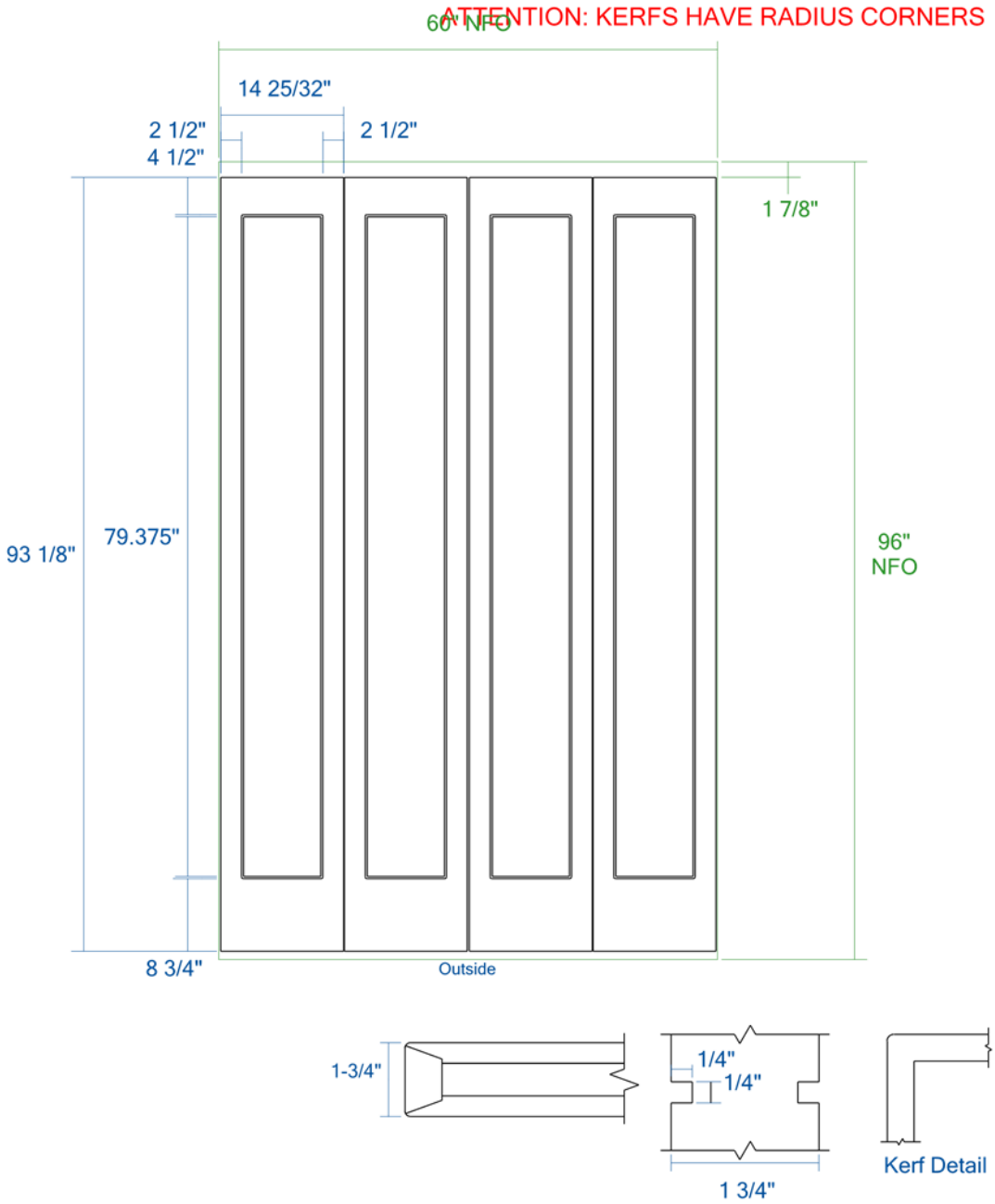

Door Style	Sticking	Panel	Material	Glass	Fire Rating	Grade
TMF1011	14Kerf	NA	MDF	N/A	Non-Rated	Interior

Quote #: SQDWE001882-1	Line #: 6 - 102
Jilco Window	Entered By: Vic Milano
Approval (sign here):	Created On: 08/14/2025

Door Elevation

TruStile Doors, LLC
1111 E. 71st Ave.
Denver, CO. 80229
www.trustile.com

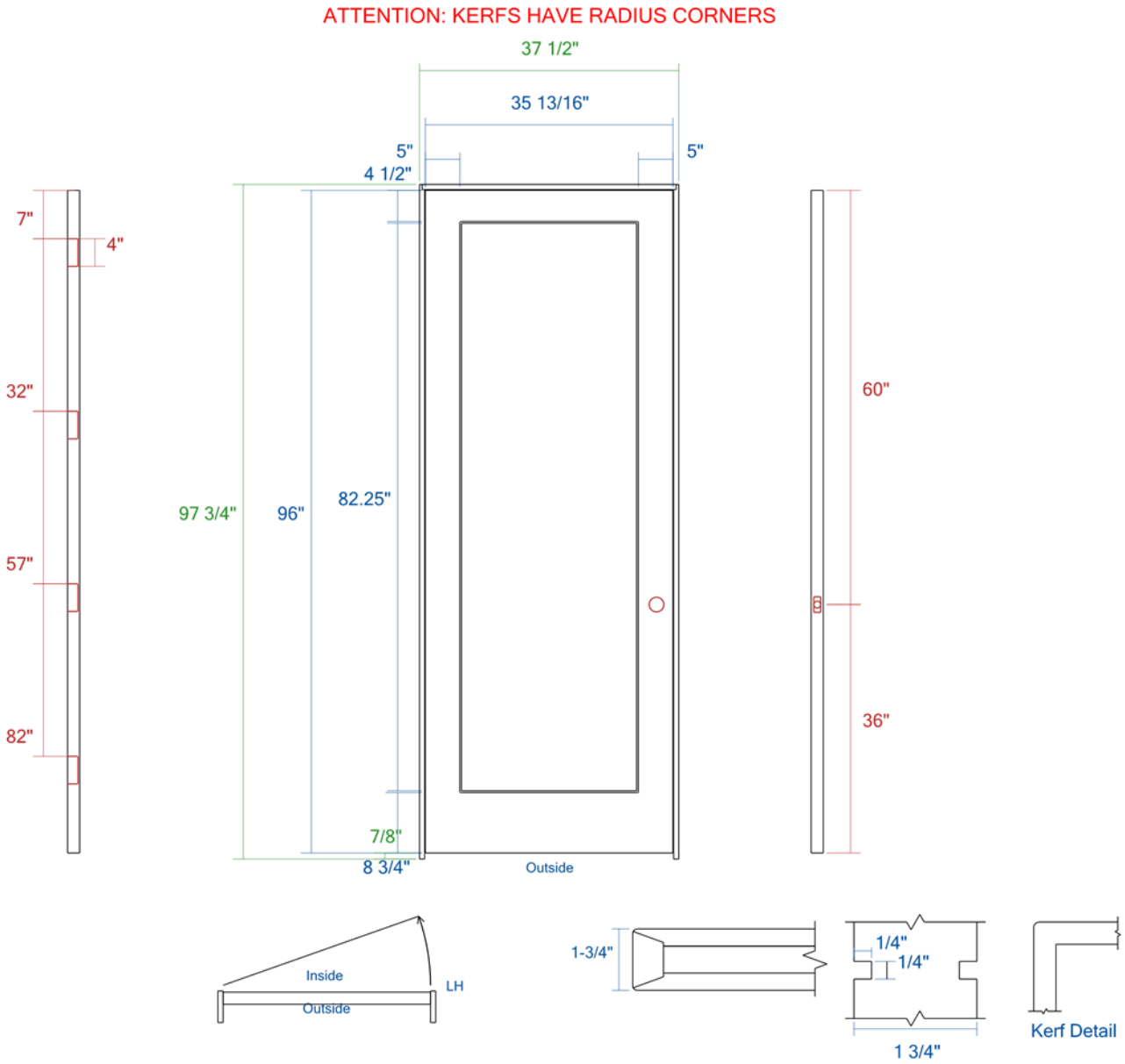

Door Style	Sticking	Panel	Material	Glass	Fire Rating	Grade
TMF1011	14Kerf	NA	MDF	N/A	Non-Rated	Interior

Quote #: SQDWE001882-1	Line #: 7 - 103
Jilco Window	Entered By: Vic Milano
Approval (sign here):	Created On: 08/14/2025

Door Elevation

TruStile Doors, LLC
1111 E. 71st Ave.
Denver, CO. 80229
www.trustile.com

ATTENTION: KERFS HAVE RADIUS CORNERS

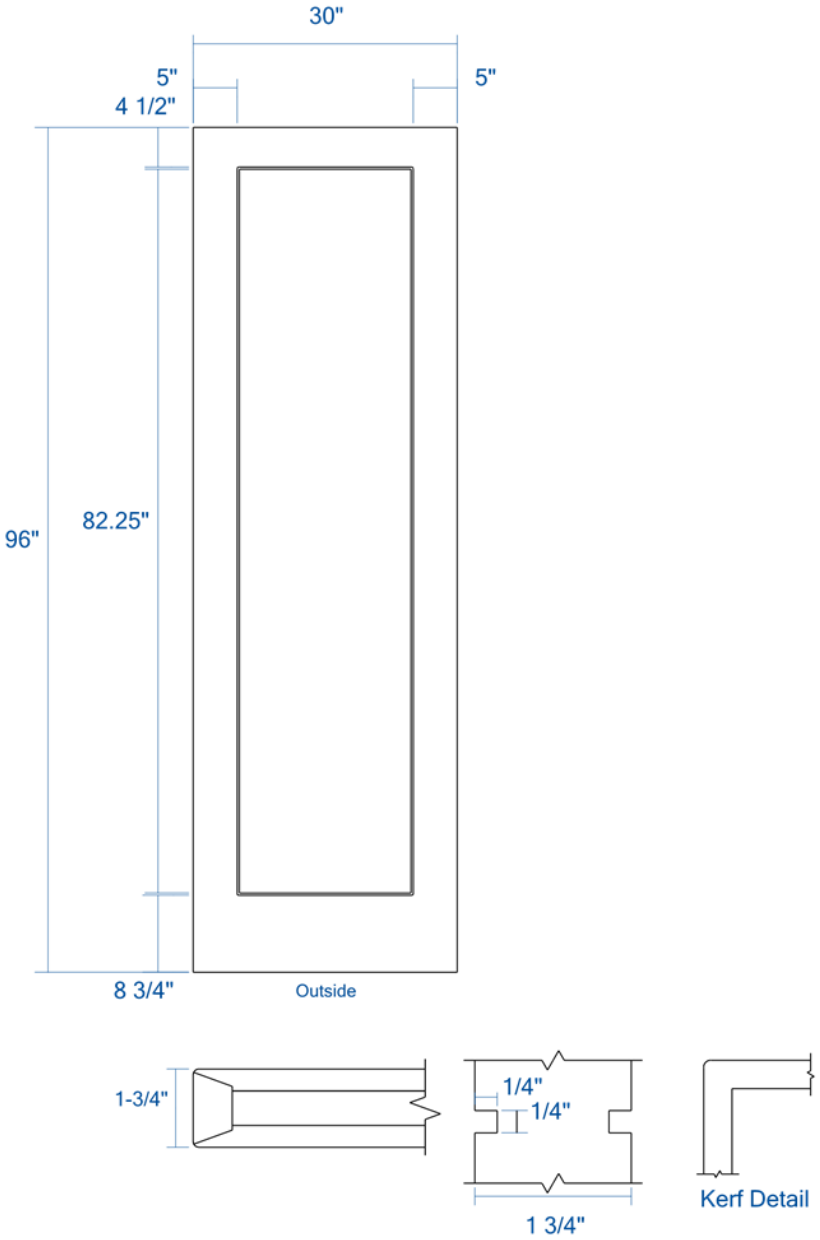

Door Style	Sticking	Panel	Material	Glass	Fire Rating	Grade
TMF1011	14Kerf	NA	MDF	N/A	Non-Rated	Interior

Quote #: SQDWE001882-1	Line #: 8 - 105/106
Jilco Window	Entered By: Vic Milano
Approval (sign here):	Created On: 08/14/2025

Door Elevation

TruStile Doors, LLC
1111 E. 71st Ave.
Denver, CO. 80229
www.trustile.com

ATTENTION: KERFS HAVE RADIUS CORNERS

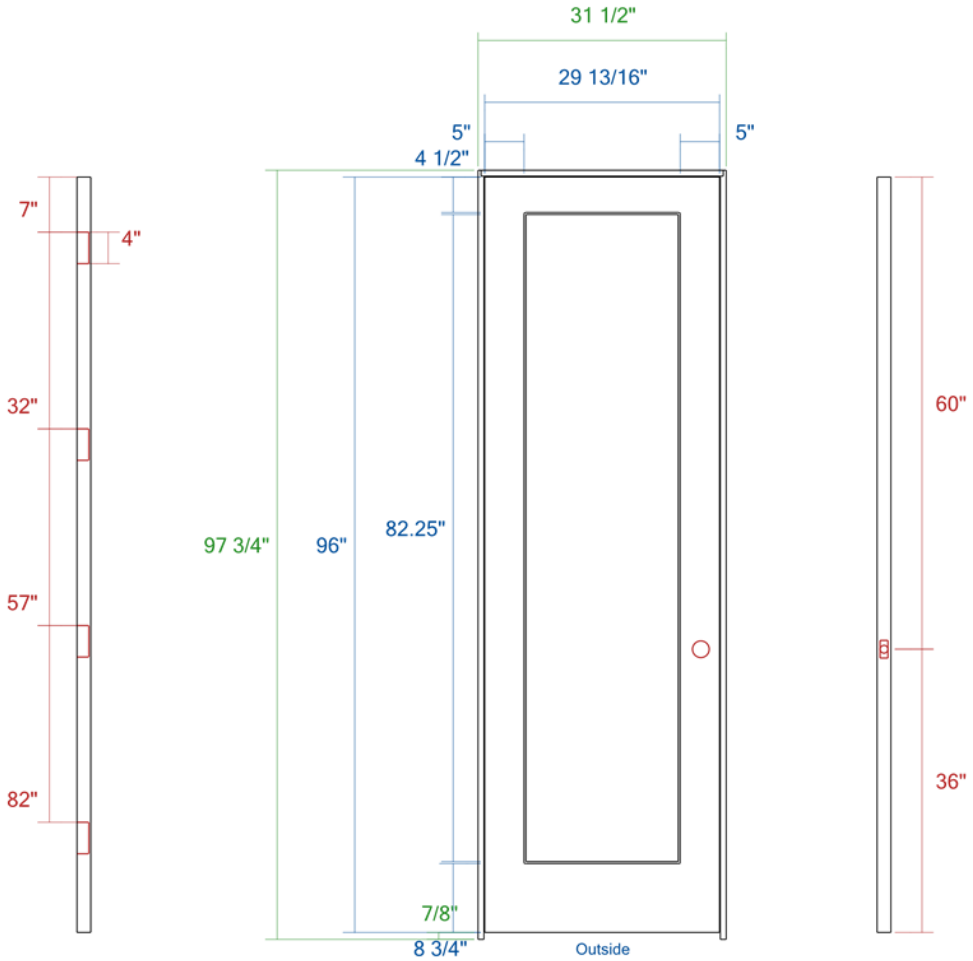

Kerf Detail

Jamb Width: 4 9/16"
Jamb Stop: Bull Nose (Applied)

Door Style	Sticking	Panel	Material	Glass	Fire Rating	Grade
TMF1011	14Kerf	NA	MDF	N/A	Non-Rated	Interior

Quote #: SQDWE001882-1	Line #: 9 - 107/108/109/110
Jilco Window	Entered By: Vic Milano
Approval (sign here):	Created On: 08/14/2025

Door Elevation

TruStile Doors, LLC
1111 E. 71st Ave.
Denver, CO. 80229
www.trustile.com

ATTENTION: KERFS HAVE RADIUS CORNERS

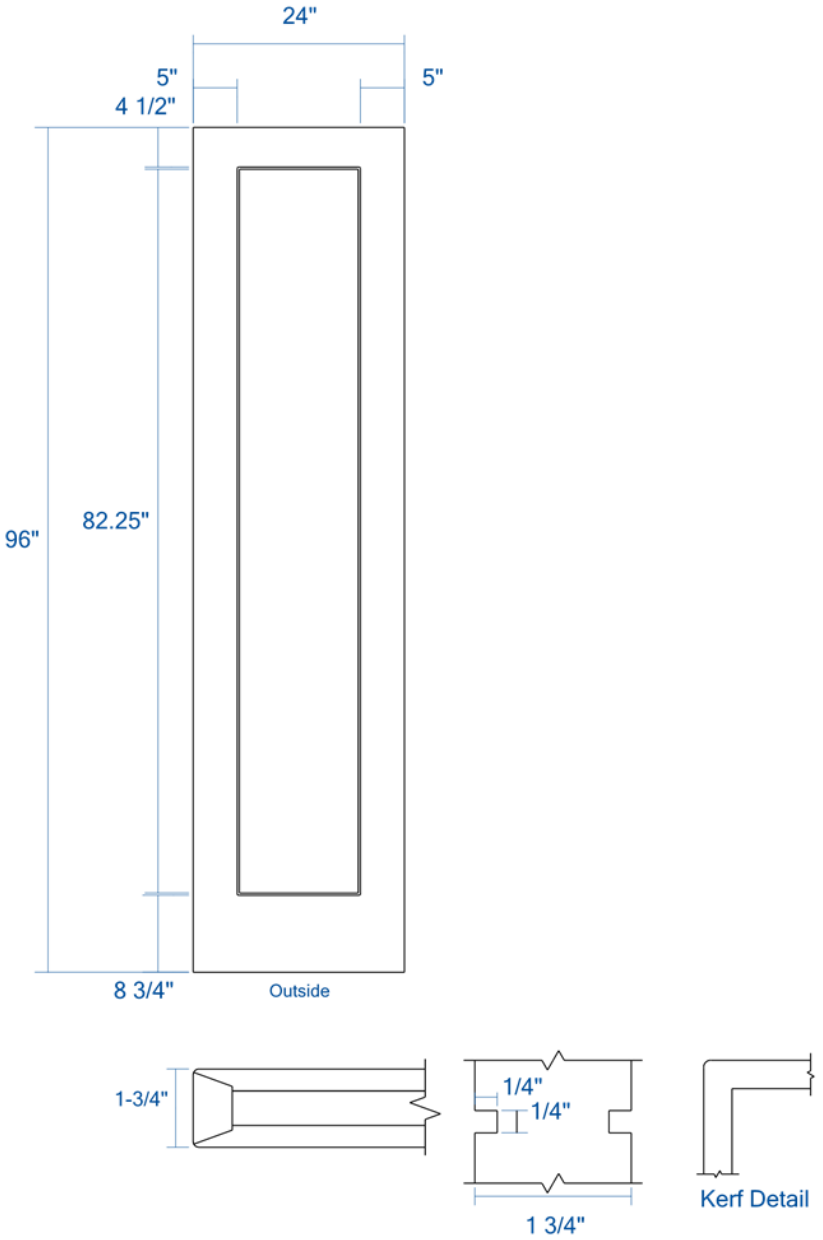

Door Style	Sticking	Panel	Material	Glass	Fire Rating	Grade
TMF1011	14Kerf	NA	MDF	N/A	Non-Rated	Interior

Quote #: SQDWE001882-1	Line #: 10 - 111
Jilco Window	Entered By: Vic Milano
Approval (sign here):	Created On: 08/14/2025

TRŪSTILE
A MARVIN BRAND

Door Elevation

TruStile Doors, LLC
1111 E. 71st Ave.
Denver, CO. 80229
www.trustile.com

ATTENTION: KERFS HAVE RADIUS CORNERS

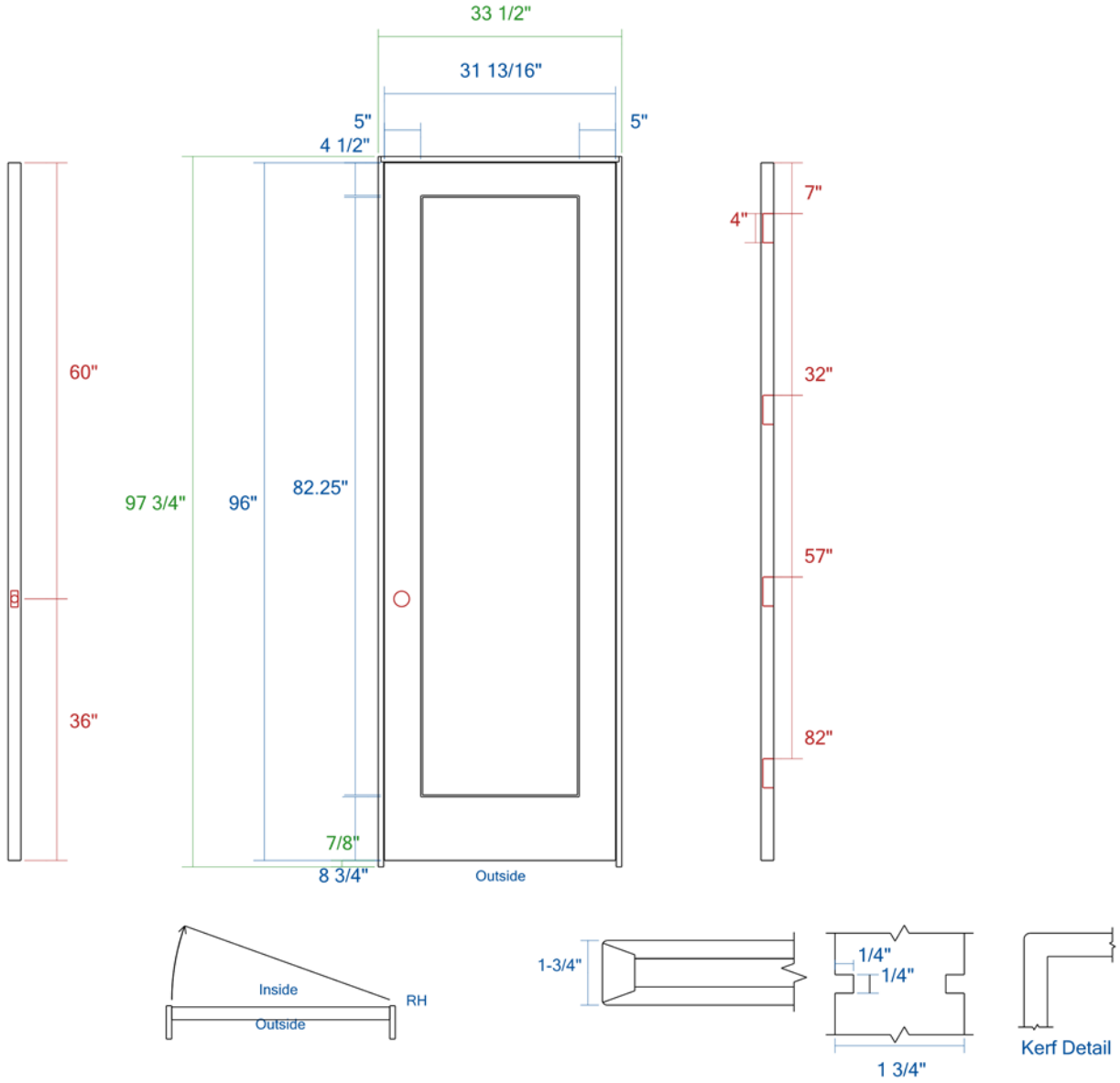

Jamb Width: 4 9/16"
Jamb Stop: Bull Nose (Applied)

Door Style	Sticking	Panel	Material	Glass	Fire Rating	Grade
TMF1011	14Kerf	NA	MDF	N/A	Non-Rated	Interior

Quote #: SQDWE001882-1	Line #: 11 - 112
Jilco Window	Entered By: Vic Milano
Approval (sign here):	Created On: 08/14/2025

Door Elevation

TruStile Doors, LLC
1111 E. 71st Ave.
Denver, CO. 80229
www.trustile.com

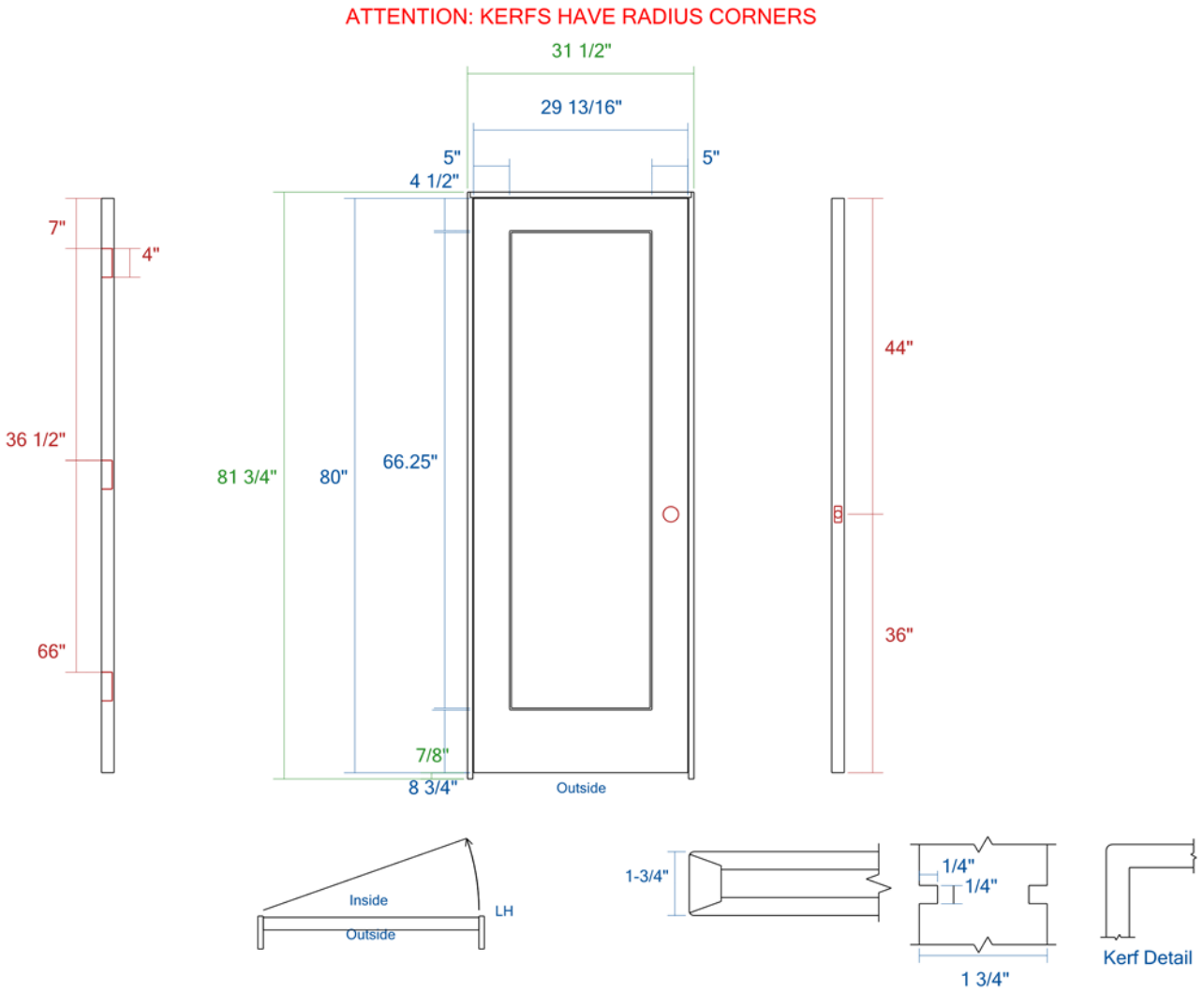

Jamb Width: 4 9/16"
Jamb Stop: Bull Nose (Applied)

Door Style	Sticking	Panel	Material	Glass	Fire Rating	Grade
TMF1011	14Kerf	NA	MDF	N/A	Non-Rated	Interior

Quote #: SQDWE001882-1	Line #: 12 - 200
Jilco Window	Entered By: Vic Milano
Approval (sign here):	Created On: 08/14/2025

Door Elevation

TruStile Doors, LLC
1111 E. 71st Ave.
Denver, CO. 80229
www.trustile.com

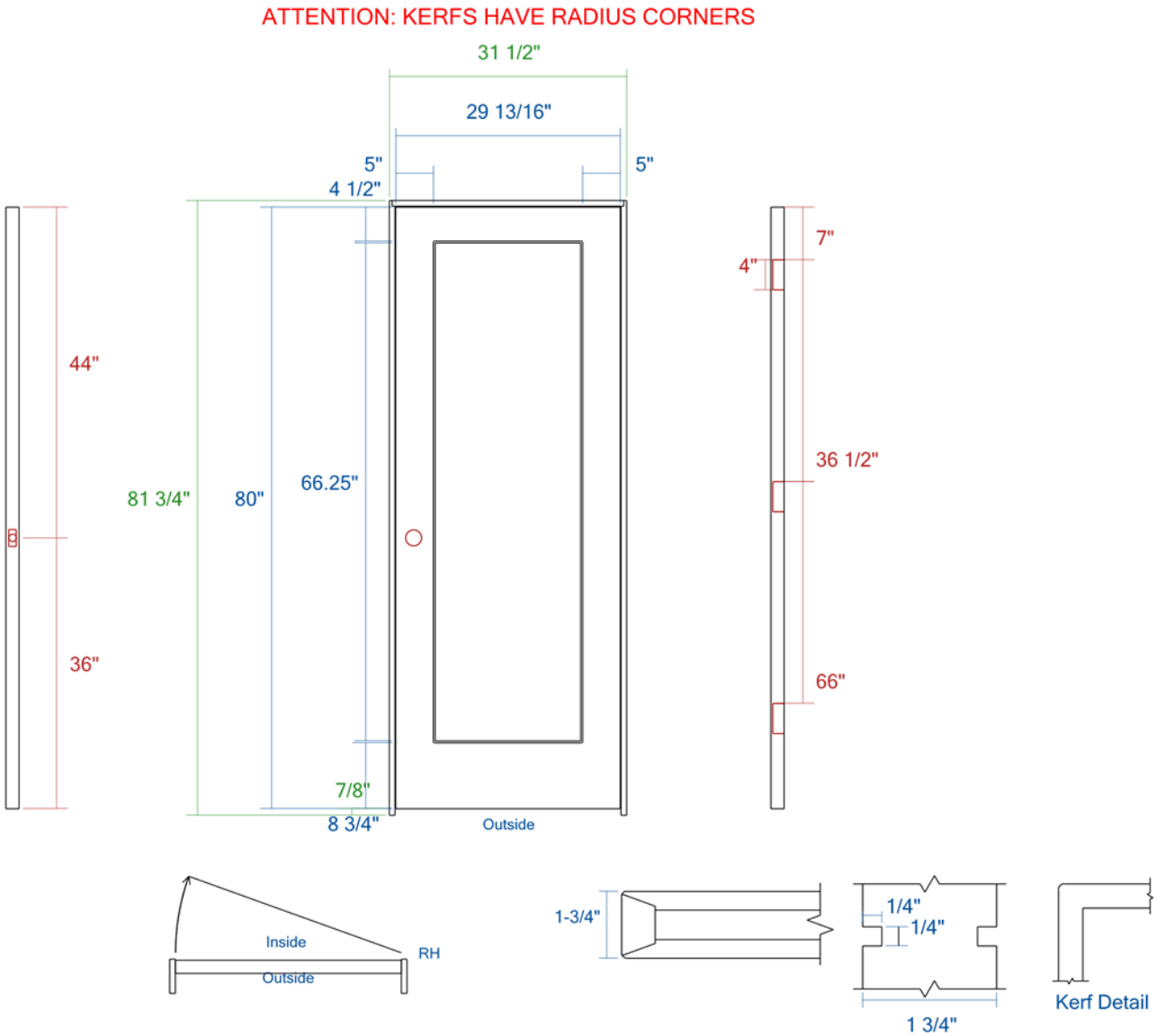

Jamb Width: 4 9/16"
Jamb Stop: Bull Nose (Applied)

Door Style	Sticking	Panel	Material	Glass	Fire Rating	Grade
TMF1011	14Kerf	NA	MDF	N/A	Non-Rated	Interior

Quote #: SQDWE001882-1	Line #: 13 - 201
Jilco Window	Entered By: Vic Milano
Approval (sign here):	Created On: 08/14/2025

Door Elevation

TruStile Doors, LLC
1111 E. 71st Ave.
Denver, CO. 80229
www.trustile.com

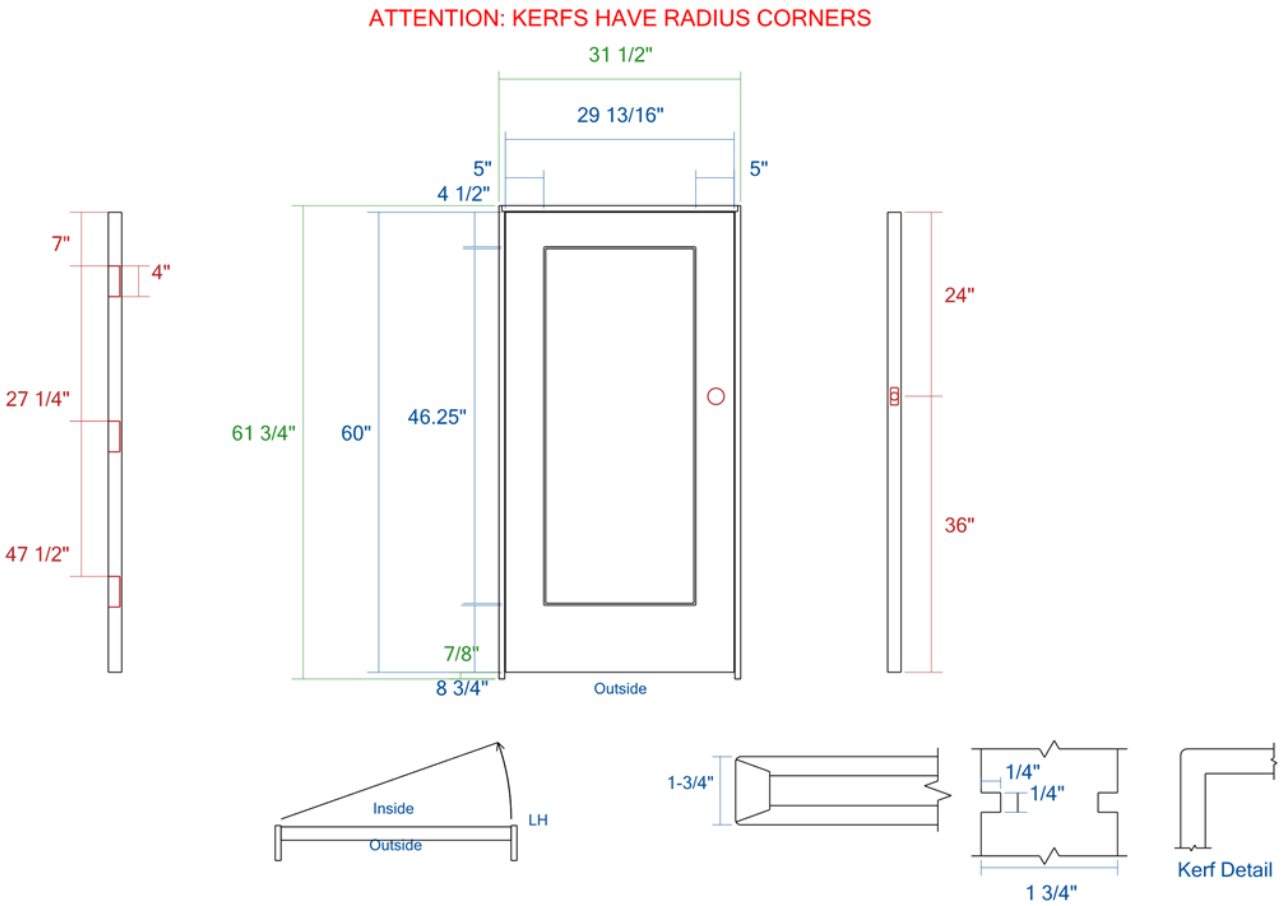

Door Style	Sticking	Panel	Material	Glass	Fire Rating	Grade
TMF1011	14Kerf	NA	MDF	N/A	Non-Rated	Interior

Quote #: SQDWE001882-1	Line #: 14 - 202
Jilco Window	Entered By: Vic Milano
Approval (sign here):	Created On: 08/14/2025

Entry System Elevation

TruStile Doors, LLC
1111 E. 71st Ave.
Denver, CO. 80229
www.trustile.com

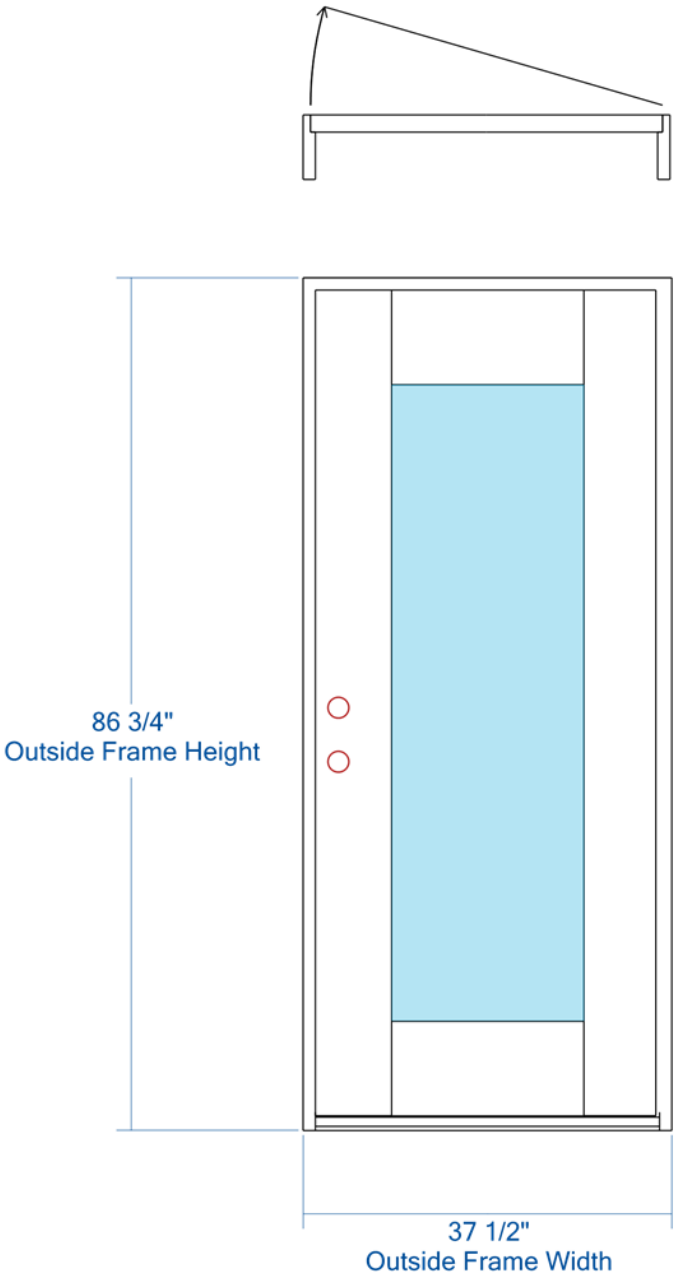

Door Style	Sticking	Panel	Material	Glass	Fire Rating	Grade
ES101			Resilient Engineered Wood	N/A	Non-Rated	Exterior

Quote #: SQDWE001882-1	Line #: 15 - 002
Jilco Window	Entered By: Vic Milano
Approval (sign here):	Created On: 08/14/2025

Door Detail

TruStile Doors, LLC
1111 E. 71st Ave.
Denver, CO. 80229
www.trustile.com

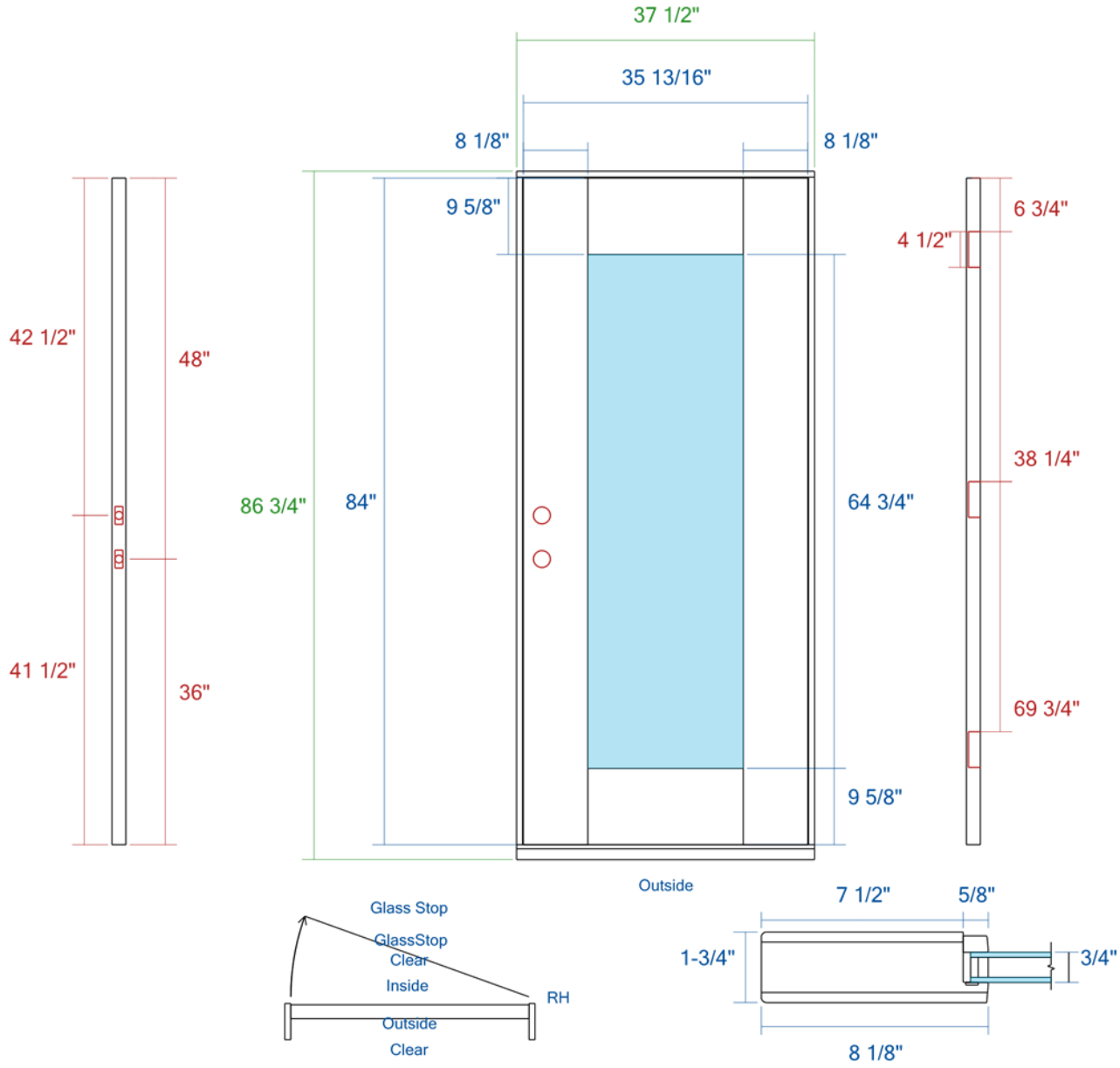

Door Style	Sticking	Panel	Material	Glass	Fire Rating	Grade
TM1000	SS	NA	Resilient Engineered Wood	3/4" Insulated Unit	Non-Rated	Exterior

Quote #: SQDWE001882-1	Line #: 15 - 002
Jilco Window	Entered By: Vic Milano
Approval (sign here):	Created On: 08/14/2025

Entry System Elevation

TruStile Doors, LLC
1111 E. 71st Ave.
Denver, CO. 80229
www.trustile.com

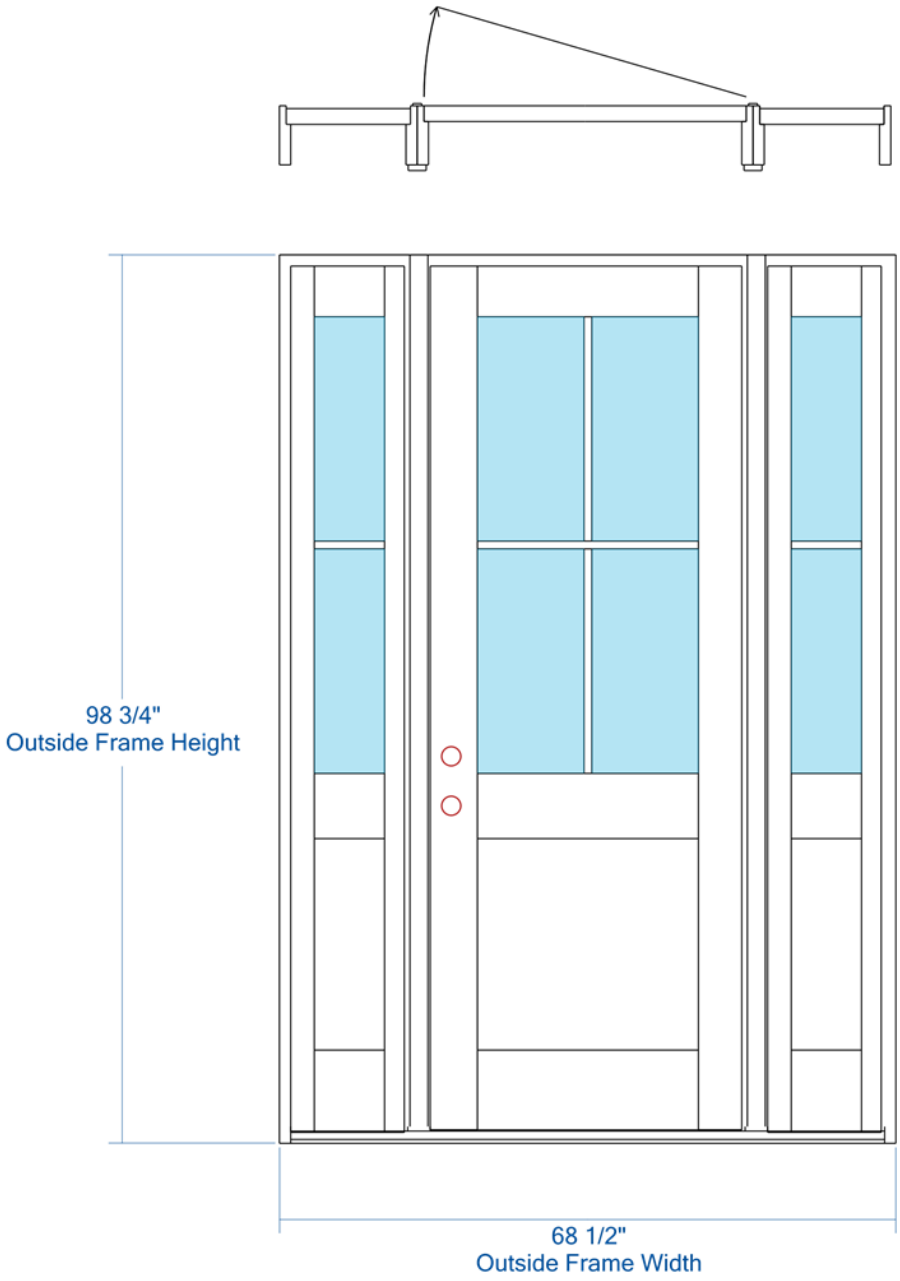

Door Style	Sticking	Panel	Material	Glass	Fire Rating	Grade
ES105			Resilient Engineered Wood	N/A	Non-Rated	Exterior

Quote #: SQDWE001882-1	Line #: 16 - 104
Jilco Window	Entered By: Vic Milano
Approval (sign here):	Created On: 08/14/2025

Door Detail

TruStile Doors, LLC
1111 E. 71st Ave.
Denver, CO. 80229
www.trustile.com

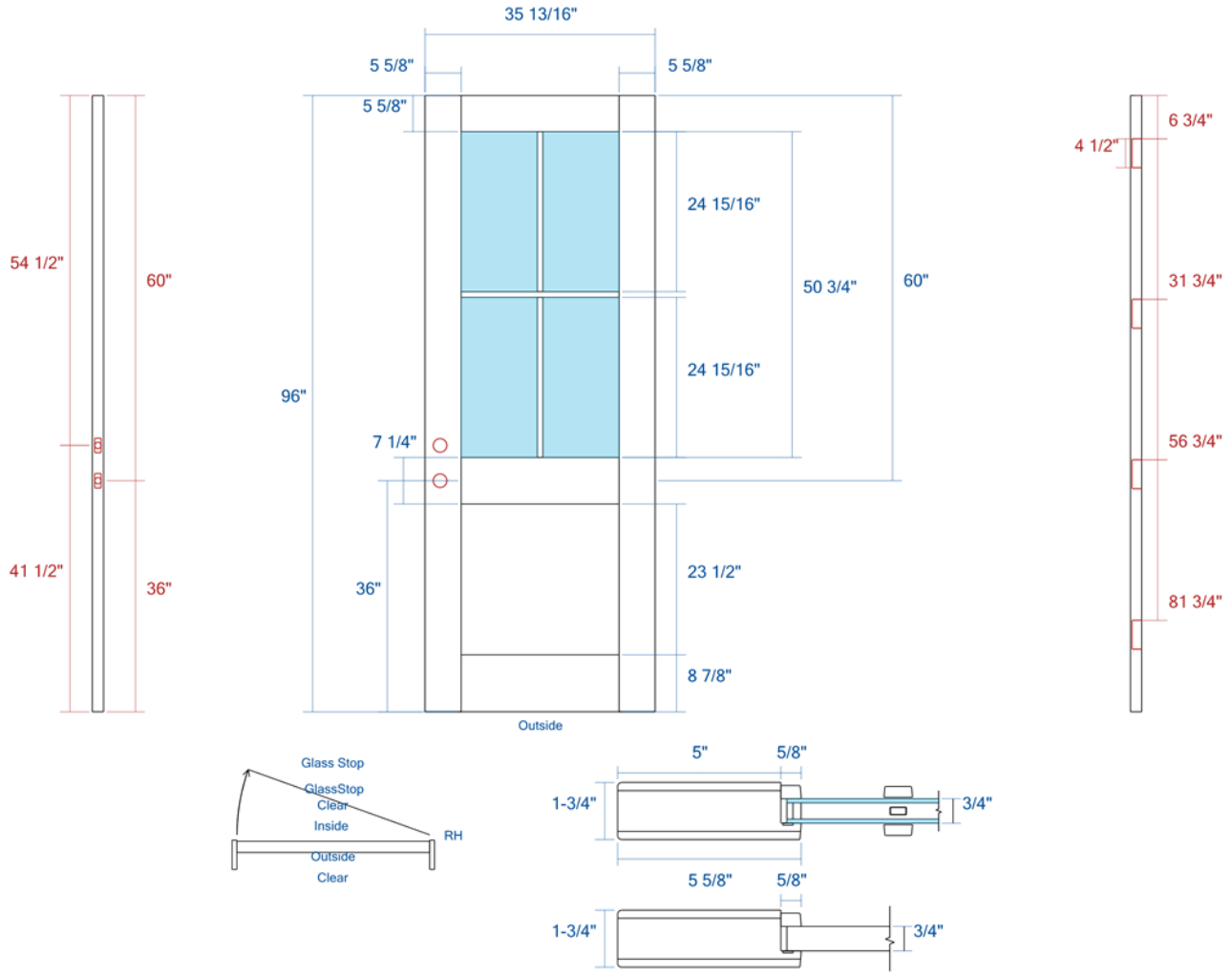

Door Style	Sticking	Panel	Material	Glass	Fire Rating	Grade
PL104	SS	C	Resilient Engineered Wood	3/4" Insulated Unit	Non-Rated	Exterior

Quote #: SQDWE001882-1	Line #: 16 - 104
Jilco Window	Entered By: Vic Milano
Approval (sign here):	Created On: 08/14/2025

Left Sidelite Detail

TruStile Doors, LLC
1111 E. 71st Ave.
Denver, CO. 80229
www.trustile.com

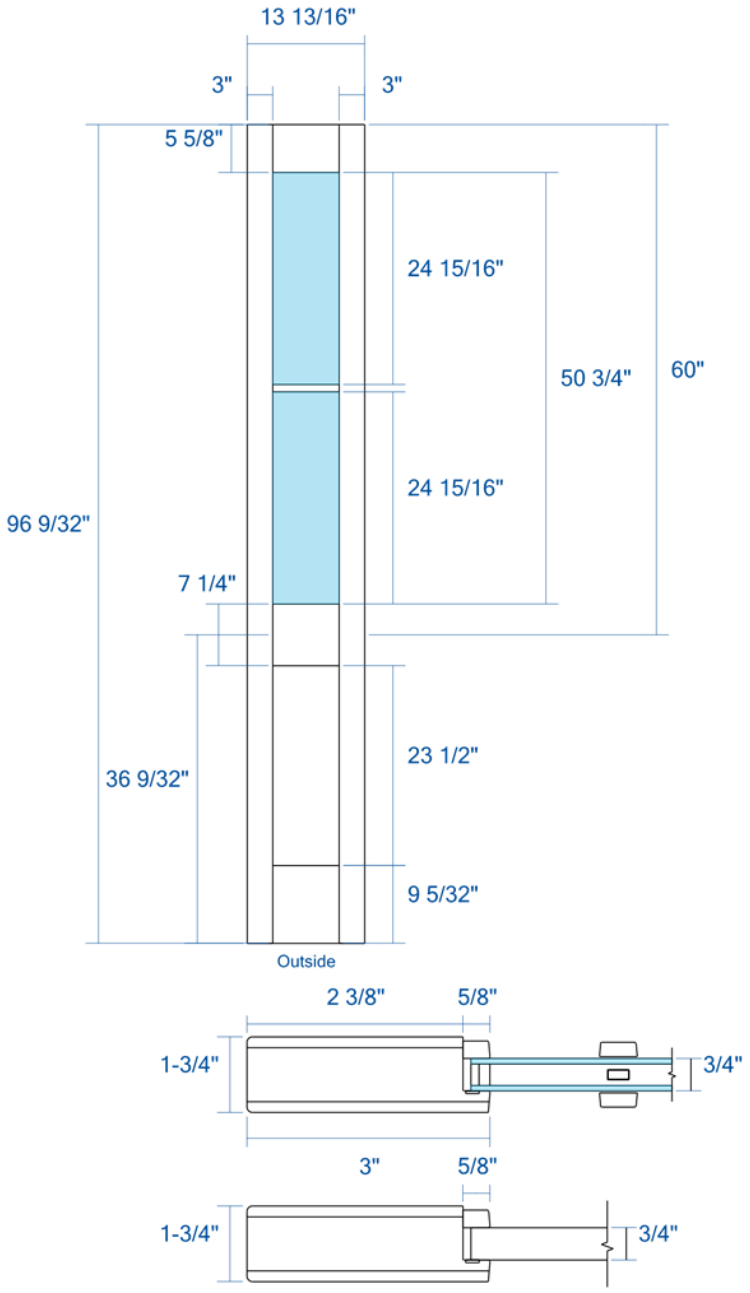

Door Style	Sticking	Panel	Material	Glass	Fire Rating	Grade
PL102	SS	C	Resilient Engineered Wood	3/4" Insulated Unit	Non-Rated	Exterior

Quote #: SQDWE001882-1	Line #: 16 - 104
Jilco Window	Entered By: Vic Milano
Approval (sign here):	Created On: 08/14/2025

Right Sidelite Detail

TruStile Doors, LLC
1111 E. 71st Ave.
Denver, CO. 80229
www.trustile.com

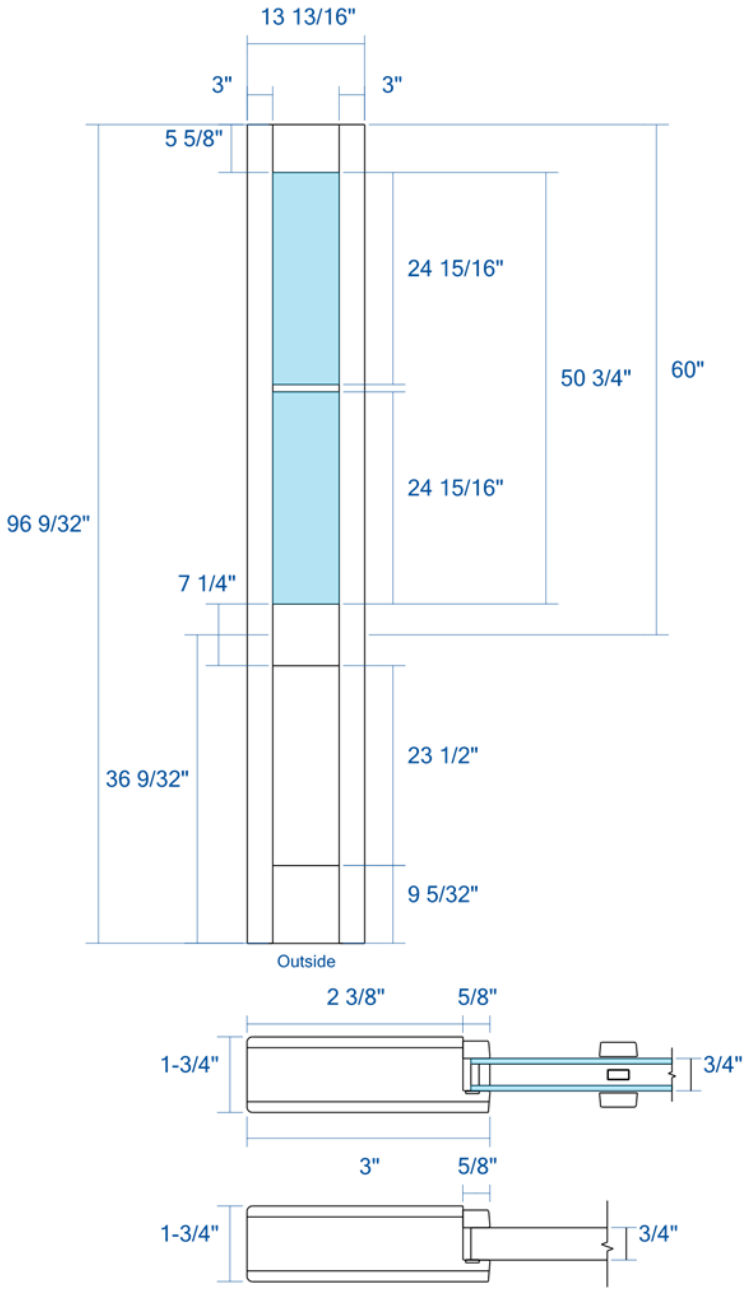

Door Style	Sticking	Panel	Material	Glass	Fire Rating	Grade
PL102	SS	C	Resilient Engineered Wood	3/4" Insulated Unit	Non-Rated	Exterior

Quote #: SQDWE001882-1	Line #: 16 - 104
Jilco Window	Entered By: Vic Milano
Approval (sign here):	Created On: 08/14/2025